Linear motion standard range

The SKF brand now stands for more than ever before, and means more to you as a valued customer.

While SKF maintains its leadership as the hallmark of quality bearings throughout the world, new dimensions in technical advances, product support and services have evolved SKF into a truly solutions-oriented supplier, creating greater value for customers.

These solutions encompass ways to bring greater productivity to customers, not only with breakthrough application-specific products, but also through leading-edge design simulation tools and consultancy services, plant asset efficiency maintenance programmes, and the industry's most advanced supply management techniques.

The SKF brand still stands for the very best in rolling bearings, but it now stands for much more.

SKF – the knowledge engineering company

Contents

(by chapters)

1 General

2 Linear guides

14 Shaft guidings
19 Ordering key for LBBR – compact series
20 LBBR Compact series
20 LBBR ../HV6 Corrosion resistant type
21 LPBR Linear plain bearings
21 LUHR Linear ball bearing units
22 LUHR .. PB Linear plain bearing units
22 LUJR Linear ball bearing units
23 LTBR Tandem linear ball bearing units
23 LSHS Shaft blocks for compact series
24 LTDR Duo linear ball bearing units
24 LQBR Quadro linear ball bearing units
25 LEBS Tandem shaft blocks
25 Appropriate special seals
26 Ordering key for LBBR – standard series
28 LBCD Standard series 3, closed type
28 LBCR Standard series 3, closed type
29 LPAR Linear plain bearings, closed type
29 LUCD Single units, self-aligning, closed type
30 LUCE Single units, self-aligning, closed type
30 LUCR Single units, closed type
31 LUCR .. PA Single plain bearing units, closed type
31 LUCS Single units, closed type
32 LUND Single units, self-aligning, closed type
32 LUNE Single units, self-aligning, closed type
33 LVCD Flanged self-aligning units
33 LVCR Flanged units
34 LSCS Shaft blocks
34 LSNS Shaft blocks
35 LTCD Tandem units, self-aligning, closed type
35 LTCR Tandem units, closed type
36 LQCD Quadro units, self-aligning, closed type
36 LQCR Quadro units, closed type
37 LEAS Tandem shaft blocks, closed type
38 LBCF Standard series 3, open type
38 LBCT Standard series 3, open type
39 LBHT Heavy-load type, open type
39 LPAT Linear plain bearings, open type
40 LUCF Single units, self-aligning, open type
40 LUCT Single units, open type
41 LUCT .. BH Single heavy-load units, open type
41 LUCT .. PA Single units, open type
42 LUNF Single units, self-aligning, open type
42 LTCF Tandem units, self-aligning, open type
43 LTCT Tandem units, open type
43 LQCF Quadro units, self-aligning, open type
44 LQCT Quadro units, open type
44 LRCB/LRCC Shaft supports, open type

45 Precision shafts
46 LJM Precision shafts, steel
46 LJMH Hard chromium plated precision shafts
46 LJMR Precision shafts, stainless steel
46 LJMS Precision shafts, stainless steel
46 LJT Hollow shafts, high grade steel
47 Ordering key for precision shafts
48 ESSC 1 Precision shaft configurations
48 ESSC 2 Precision shaft configurations
48 ESSC 3 Precision shaft configurations
48 ESSC 4 Precision shaft configurations
49 ESSC 5 Precision shaft configurations
49 ESSC 6 Precision shaft configurations
49 ESSC 7 Precision shaft configurations
50 ESSC 8 Precision shaft configurations
50 ESSC 9 Precision shaft configurations
50 ESSC 10 Precision shaft configurations
51 Design and basic data

53 Linear ball bearing table without drive
54 Ordering key for linear ball bearing table without drive
55 LZBU .. A-2LS Quadro linear tables
56 LZBU .. B-2LS Quadro linear tables
57 LZAU ..-2LS Quadro linear tables

58 Applications

59 LLT Profile rail guides
60 Product overview
61 Ordering key for profile rail guides
62 LLTHC .. A Carriage
64 LLTHC .. LA Carriage
66 LLTHC .. R Carriage
68 LLTHC .. LR Carriage
70 LLTHC .. U Carriage
72 LLTHC .. SU Carriage
74 LLTHR Rails
76 LLTHR .. D4 Rails
78 Accessories
79 Scraper plate
80 Additional front seal
81 Seal kit
82 Bellows

84 Applications

85 Miniature profile rail guides
88 Ordering key for miniature profile rail guides
89 LLMHR Standard rails
89 LLMWR Wide rails
89 LLMHC .. TA Standard carriages
90 LLMWC .. TA Carriages for wide rails
90 LLMHC .. LA Long carriages
90 LLMWC .. LA Long carriages for wide rails

91 Applications

93 Precision rail guides
93 Modular range rail guides
94 Anti cage-creep system (ACSM) for LWRE
95 Ordering key for precision rail guides
96 LWR Precision rail guides
96 LWRB Precision rail guides
96 LWAL Cross roller assemblies, aluminium cages
96 LWJK Ball assemblies, plastics cages
96 LWAK Cross roller assemblies, plastics cages
96 LWERA End stops
96 LWGD Special attachment screws
97 LWR 3/6 .. Kit Precision rail guide kits
98 LWRB 1 Precision rail guides
98 LWRB 2 Precision rail guides
99 LWR 3 Precision rail guides
99 LWR 6 Precision rail guides
100 LWR 9 Precision rail guides
101 LWRE Precision rail guides
101 LWAKE Cross roller assemblies, plastics cage
101 LWERE End stops
101 LWGD Special attachment screws
102 LWRE 3/6 .. Kit Precision rail guide kits
103 LWRE 3/6 .. ACS Kit Precision rail guide kits with ACS
104 LWRE 3 Precision rail guides
104 LWRE 2211 Precision rail guides
105 LWRE 6 Precision rail guides
105 LWRE 9 Precision rail guides
106 LWRB 2 ACSM Precision rail guides
106 LWRE 3/6/9 ACSM Precision rail guides
106 LWJK 2 ACSM Precision rail guides
106 LWAKE 3/6/9 ACSM Precision rail guides
107 LWRE 3 ACSM Kit Precision rail guide kits with ACSM
107 LWRE 6 ACSM Kit Precision rail guide kits with ACSM
108 LWRE 3 ACS Precision rail guides with ACS
108 LWRE 2211 ACS Precision rail guides with ACS
109 LWRE 6 ACS Precision rail guides with ACS
109 LWRE 9 ACS Precision rail guides with ACS
110 LWRM/LWRV Precision rail guides
110 LWHW Needle roller cage, aluminium
110 LWEARM End stops
110 LWEARV End stops
110 LWGD Special attachment screws
111 LWRM 6/LWRV 6 Precision rail guides
111 LWRM 9/LWRV 9 Precision rail guides
112 LWM/LWV Precision rail guides
112 LWHW Needle roller cage, aluminium
112 LWEAM End stops
112 LWEAV End stops
112 LWGD Special attachment screws
113 LWM 3015/LWV 3015 Precision rail guides
113 M4 DIN 84
113 LWM 4020/LWV 4020 Precision rail guides
113 M6 DIN 84
114 LWM 5025/LWV 5025 Precision rail guides
114 M6 DIN 84
114 LWM 6035/LWV 6035 Precision rail guides
114 M8 DIN 84
115 LWM 7040/LWV 7040 Precision rail guides
115 M10 DIN 84
115 LWM 8050/LWV 8050 Precision rail guides
115 M12 DIN 84
116 LWRPM/LWRPV Precision rail guides
117 LWRPM 3/6/9 Precision rail guides
117 LWRPV 3/6/9 Precision rail guides

118 Applications

3 Ball & roller screws

121 Ball screws and roller screws

122 How to choose

123 Precision rolled ball screws
124 Ordering key for precision ball screws
126 SD/BD/SH Miniature ball screws
126 SX/BX Universal ball screws
128 SDS/BDS/SHS Miniature ball screws in stainless steel
129 FHRF Round flanges for SX nuts
129 FHSF Square flanges for SX nuts
129 FHTF Trunnion flange for SX nuts
130 SND/BND Precision ball screws, DIN standard
130 PND Precision ball screws, DIN standard, preloaded
132 SN/BN Precision ball screws
132 PN Precision ball screws, preloaded
134 SL/TL Long lead screws
134 SLD/TLD Long lead ball screws, DIN standard
136 Rotating nut
138 Shaft and combinations for rolled ball screws
139 Standard end machining for nominal diameter < 16 mm
140 Standard end machining for nominal diameter ≥ 16 mm
142 PLBU Plummer bearing units
142 FLBU Flanged bearing units
143 BUF End bearing units

144 Ground ball screws
145 Ordering key for ground ball screws
146 SKD/BKD single nut
148 PKD flanged nut with preload
150 Precision ground screw (inches version)

152 Applications

153 Roller screws
154 Planetary roller screws: principle
155 Recirculating roller screws: principle
157 Ordering key for roller screws
158 SRC/BRC Range
160 SRF/BRF Range
162 PRU Range
164 PRK Range
166 SVC/BVC Range
167 SVF/BVF Range
168 PVU Range
169 PVK Range

170 Ultra Power range: principle
172 HRC - Range
174 HRF - Range
176 HRP - Range
178 Rotating nut roller screws
179 Inverted roller screws

180 Roller screws service range
181 General rules
182 Service range option 1) Planetary roller screw standard nuts in stock
183 Service range option 1) Recirculating roller screw standard nuts in stock
184 Service range option 2) Planetary roller screw nuts and screw shafts in stock
184 BRC - Range
185 Service range option 2) Recirculating roller screw nuts and screw shafts in stock
185 BVC - Range
186 Service range option 3) Complete planetary roller screw assemblies with FLRBU
187 Service range option 3) Complete recirculating roller screw assemblies with FLRBU
188 Accessories for roller screws
189 End machining for FLRBU
190 Thrust bearing units for the standard roller screw range
191 Symbols

192 Applications

4 Tables: driven and not driven

195 General
195 LZM miniature slides: principle
196 GCL Standard slides: principle
196 GCLA Standard slides: principle
196 RM Standard slides: principle
196 SSM/SSK Dovetail slides: principle
196 TO/TS Compact cross tables: principle
196 RSM/RSK Precision slides: principle
197 LZBB/LZAB Linear ball bearing tables: principle
197 LTB Profile rail guide slides: principle
197 LTS profile rail guide slides with linear motor: principle
197 Complete systems
200 Ordering key for miniature slides
201 LZM Miniature slides
203 Ordering key for standard slides
204 GCL Standard slides, steel version
206 GCLA Standard slides, aluminium version
208 RM Standard slides
209 Ordering key for slides, tables and compact cross tables
210 SSM/SSK Dovetail slides
213 TO/TS Compact cross tables
214 RSM/RSK Precision slides
216 Ordering key for linear ball bearing table with drive
217 LZBB Linear ball bearing tables, ball screw (*on request*)
218 LZAB Linear ball bearing tables, ball screw (*on request*)
219 Ordering key for profile rail guide slides with screw drive
219 Profile rail guide slides, preferred range
220 LTB110.L1.SD/TN12xx-BL: Slides with ball screw drive, with or without bellows
221 LTB110.L1.SD/TN12xx-SC: Slides with ball screw drive and steel cover
222 LTB170.L1.SD/TN16xx-BL: Slides with ball screw drive, with or without bellows
223 LTB170.L1.SD/TN16xx-SC: Slides with ball screw drive and steel cover
224 LTB235.L1.SX/TN/TL25xx-BL: Slides with ball screw drive, with or without bellows
226 LTB235.L1.SX/TN/TL25xx-SC: Slides with ball screw drive and steel cover
228 LTB320.L1.SX/TN/TL32xx-BL: Slides with ball screw drive, with or without bellows
229 LTB320.L1.SX/TN/TL32xx-SC: Slides with ball screw drive and steel cover
230 LTB400.L1.SX/TN/TL40xx-BL: Slides with ball screw drive, with or without bellows
232 Ordering key for profile rail guide slides with linear motor drive
233 Linear motor technical details
234 LTS 154.L1.1FN3-050-xK: Slides with linear motor drive, with or without bellows
235 LTS 182.L1.1FN3-100-xK: Slides with linear motor drive, with or without bellows
236 LTS 212.L1.1FN3-150-xK: Slides with linear motor drive, with or without bellows
237 LTS 212.L1.1FN3-150-xK

239 Applications

5 Customized solutions

241 Standard plug & play electromechanical cylinder
241 Compact electromechanical cylinder
242 Complete systems for positioning
242 Linear motor tables

6 SKF – The knowledge engineering company

Contents

(by alphabetical order)

A

Accessories:
- For profile rail guides . . . 78
- For roller screws . . . 188

Additional front seal . . . 80
Anti cage-creep system (ACSM) for LWRE . . . 94
Applications:
- For ball screws . . . 152
- For linear ball bearings . . . 58
- For miniature profile rail guides . . . 91
- For positioning tables . . . 239
- For precision rail guides . . . 118
- For profile rail guides . . . 84
- For roller screws . . . 192

Appropriate special seals . . . 25

B

Ball and roller screws . . . 105
Ball screws and roller screws . . . 121
BD . . . 126
BDS . . . 128
Bellows . . . 82
BKD . . . 146
BN . . . 132
BND . . . 130
BRC . . . 158, 184
BRF . . . 160
BUF End bearing units . . . 143
BVC . . . 166, 185
BVF . . . 167
BX . . . 126

C

Compact electromechanical cylinder . . . 241
Complete systems for positioning . . . 197, 242
Customized solutions . . . 241

D

Design and basic data . . . 51
Driving systems . . . 121

E

ESSC 1 . . . 48
ESSC 2 . . . 48
ESSC 3 . . . 48
ESSC 4 . . . 48
ESSC 5 . . . 49
ESSC 6 . . . 49
ESSC 7 . . . 49
ESSC 8 . . . 50
ESSC 9 . . . 50
ESSC 10 . . . 50

F

FHRF . . . 129
FHSF . . . 129
FHTF . . . 129
FLBU . . . 142

G

GCL . . . 204
GCL: principle . . . 196
GCLA . . . 206
GCLA: principle . . . 196
General . . . 9
General (positioning systems) . . . 195
General rules for roller screws service range . . . 181
Ground ball screws . . . 144
Guiding systems . . . 13

H

How to make your choose . . . 122
HRC . . . 172
HRF . . . 174
HRP . . . 176

I

Inverted roller screws . . . 179

L

LBBR 20
LBBR ../HV6 20
LBCD 28
LBCF 38
LBCR 28
LBCT 38
LBHT 39
LEAS 37
LEBS 25
Linear ball bearing table without drive 53
Linear motor tables 242
Linear motor technical details 233
LJM 46
LJMH 46
LJMR 46
LJMS 46
LJT 46
LLMHC ..LA 90
LLMHC ..TA 89
LLMHR 89
LLMWC ..LA 90
LLMWC ..TA 90
LLMWR 73
LLT 59
LLTHC .. A 62
LTHC .. LA 64
LLTHC .. LR 68
LLTHC .. R 66
LLTHC .. SU 72
LLTHC .. U 70
LLTHR .. D4 76
LLTHR 74
LPAR 29
LPAT 39
LPBR 21
LQBR 24
LQCD 36
LQCF 43
LQCR 36
LQCT 44
LRCB 44
LRCC 44
LSCS 34
LSHS 23
LSNS 34
LTB: principle 197
LTB110.L1.SD/TN12xx-BL 220
LTB110.L1.SD/TN12xx-SC 221
LTB170.L1.SD/TN16xx-BL 222
LTB170.L1.SD/TN16xx-SC 223
LTB235.L1.SX/TN/TL25xx-BL 224
LTB235.L1.SX/TN/TL25xx-SC 226
LTB320.L1.SX/TN/TL32xx-BL 228
LTB320.L1.SX/TN/TL32xx-SC 229
LTB400.L1.SX/TN/TL40xx-BL 230
LTBR 23
LTCD 35
LTCF 42
LTCR 35
LTCT 43
LTDR 24
LTS 154.L1.1FN3-050-xK 234
LTS 182.L1.1FN3-100-xK 235
LTS 212.L1.1FN3-150-xK 237
LTS 212.L1.1FN3-150-xK 236
LTS: principle 197
LUCD 29
LUCE 30
LUCF 40
LUCR 30
LUCR .. PA 31
LUCS 31
LUCT 40
LUCT .. BH 41
LUCT .. PA 41
LUHR 21
LUHR .. PB 22
LUJR 22
LUND 32
LUNE 32
LUNF 42
LVCD 33
LVCR 33
LWAK 96
LWAKE 101
LWAKE 3/6/9 ACSM 106
LWAL 96
LWEAM 112
LWEARM 110
LWEARV 110
LWEAV 112
LWERA 96
LWERE 101
LWGD 96, 101, 110, 112
LWHW 110, 112
LWJK 96
LWJK 2 ACSM 106
LWM 112
LWM 3015 113
LWM 4020 113
LWM 5025 114
LWM 6035 114
LWM 7040 115
LWM 8050 115
LWR 96
LWR 3 99
LWR 3/6 97
LWR 6 99
LWR 9 100
LWRB 96
LWRB 1 98
LWRB 2 98
LWRB 2 ACSM 106
LWRE 2211 104
LWRE 2211 ACS 108
LWRE 3 ACS 108

LWRE 3 104
LWRE 3 ACSM Kit 107
LWRE 3/6 .. Kit 102
LWRE 3/6 .. ACS Kit 103
LWRE 3/6/9 ACSM 106
LWRE 6 105
LWRE 6 ACS 109
LWRE 6 ACSM Kit 107
LWRE 9 105
LWRE 9 ACS 109
LWRM 110
LWRM 6 111
LWRM 9 111
LWRPM 116
LWRPM 3/6/9 117
LWRPV 116
LWRPV 3/6/9 117
LWRV 110
LWRV 6 111
LWRV 9 111
LWV 112
LWV 3015 113
LWV 4020 113
LWV 5025 114
LWV 6035 114
LWV 7040 115
LWV 8050 115
LZAB 218
LZAU ..-2LS 57
LZBB 217
LZBB/LZAB: principle 197
LZBU .. A-2LS 55
LZBU .. B-2LS 56
LZM 201
LZM: principle 195

M

M4 DIN 84 113
M6 DIN 84 . . . . . 113, 114
M8 DIN 84 114
M10 DIN 84 115
M12 DIN 84 115
Miniature profile rail guides 85
Modular range rail guides 93

O

Ordering key for:
Ground ball screws 145
LBBR – compact series 19
LBBR – standard series 26
Linear ball bearing table with drive 216
Linear ball bearing table without drive 54
Miniature profile rail guides 88
Miniature slides 200
Precision ball screw 124
Precision rail guides 95
Precision shafts 47
Profile rail guides 61
Profile rail guide slides with linear motor drive 232
Profile rail guide slides with screw drive 219
Roller screws 157
Slides, tables and compact cross tables 209
Standard slides 203

P

PKD 148
Planetary roller screws: principle 154
PLBU 142
PN 132
PND 130
Positioning systems 195
Precision ground screw (inches version) 150
Precision rail guides 93
Precision rolled ball screws 123
Precision shafts 45
PRK 164
Product overview 60
Profile rail guides 59
Profile rail guide slides 219
Profile rail guide slides, preferred range 219
PRU 162
PVK 169
PVU 168

R

Recirculating roller screws: principle 155
RM 208
RM: principle 196
Roller screws 153
Rotating nut 136
Rotating nut roller screws 178
RSK 214
RSM 214
RSM/RSK: principle 196

S

Scraper plate 79
SD 126
SDS 128
Seal kit 81
Service range option 1):
Planetary roller screw standard nuts in stock 182
Recirculating roller screw standard nuts in stock 183
Service range option 2):
Planetary roller screw nuts and screw shafts in stock 184
Recirculating roller screw nuts and screw shafts in stock . . . 185
Service range option 3):
Complete planetary roller screw assemblies with FLRBU . . . 186

Complete recirculating roller screw assemblies with FLRBU . . 187
SH 126
Shaft and combinations for rolled ball screws 138
Shaft guiding 14
SHS 128
SKA 192
SKD 146
SKG 187
SKS 192
SL 134
SLD 134
SLS 193
SN 132
SND 130
Spare parts for actuators 224
SRC 158
SRF 160
SSK 210
SSM 210
SSM/SSK: principle 196
Standard end machining for nominal diameter < 16 mm 139
Standard end machining for nominal diameter ≥ 16 mm 140
Standard plug & play electromechanical cylinder 241
STD 191
STG 190
STW 189
SVC 166
SVF 167
SX 126
Symbols 191

T

Thrust bearing units for the standard roller screw range. 190
TL. 134
TLD 134
TO 213
TO/TS: principle. 196
TS 213

U

Ultra Power range: principle. 170

General

About SKF

The SKF Group is one of the leading global supplier of products, solutions and services in the area comprising rolling bearings, seals, mechatronics, services and lubrication systems. The Group's service offer also includes technical support, maintenance services, condition monitoring and training.

The SKF business is organized into three divisions; Industrial, Automotive and Service. Each division serves a global market, focusing on its specific customer segments.

SKF has 120 manufacturing sites distributed all over the world and its own sales companies in 70 countries. SKF is also represented in 140 countries through some 15 000 distributors and dealers. SKF is always close to its customers for the supply of both products and services.

SKF was founded in 1907 and from the very beginning focused intensively on quality, technical development and marketing. The results of the Group's efforts in the area of research and development have led to a growing number of innovations that has created new standards and new products in the bearing world.

The Group has a global ISO 14001 environmental certification and global health and safety management standard OHSAS 18001 certification. Its operations have been approved for quality certification in accordance with either ISO 9000 or QS 9000.

Mechatronics

Mechatronics is the science of bringing together mechanics and electronics into exciting new solutions. It is a rapidly advancing area that provides dramatic opportunity to solve old problems in a clever and environmentally friend way. SKF has more than 400 engineers dedicated to this area.

By being at the forefront of this technology for many years, SKF has developed unique application knowledge in hardware and software. In combining actuators, bearings, sealing, lubrication, sensors and electronics competences, we have been able to develop a number of standard and customized solutions. SKF offers a wide assortment of mechatronic products:

- Actuation systems
- Linear motion
- Motion control
- Magnetic bearings

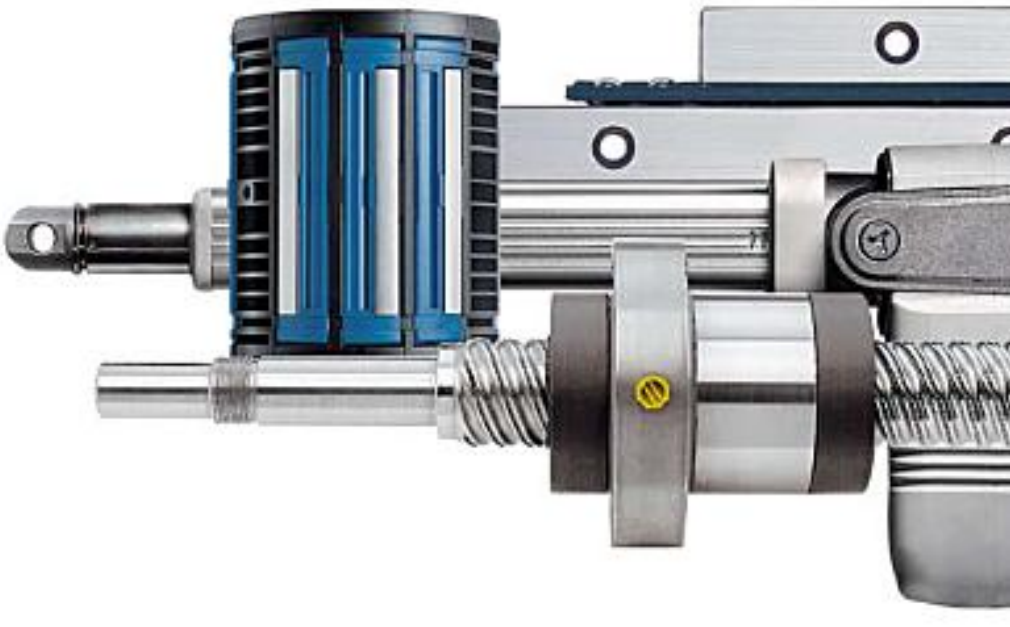

How to get more information

Selecting, defining and purchasing linear guidings, ball and roller screws and actuation systems from SKF has never been so simple.

www.skf.com

Consult SKF's comprehensive website for more information on linear motion and actuation products, together with a description of our services.

On-line product selection

Discover our wide range of high precision components, units and systems for linear movements, providing solutions for guiding, driving, actuation and positioning.

3D drawings download

CAD files of our products can be accessed online following some simple steps: find the right product family from the product tree, you will be sent to the product selector and then find the product designation you want to download.

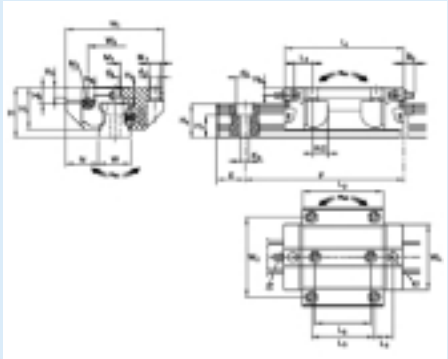

PDF catalogues download

In addition to this publication we have all product brochures available as pdf documents on the internet, ready to be downloaded.

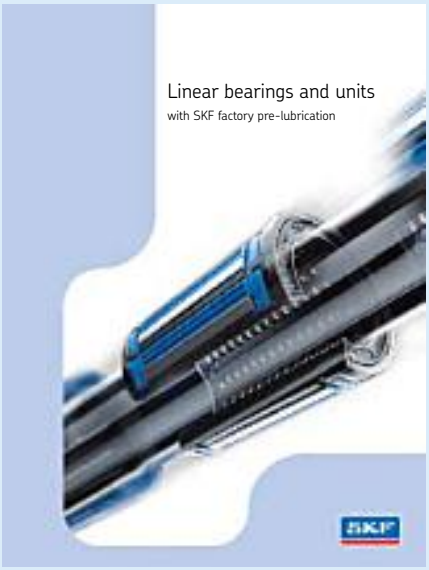

About this publication

The encyclopedia of the linear motion
This publication introduces over 250 pages of information on all the standard products with clear tables to help the customer select and order the right solution and correct product.

How to handle

This publication consists of 3 chapters divided as follows:

- Guiding systems
- Driving systems
- Positioning systems

The chapters are arranged from the most simple, the guiding systems, through to the most complex, the positioning systems, which consists of parts of the other components.

Each linear solution is introduced by a overview, which makes it easy to select the right product.

Different subjects are contained in the separate chapters, starting with a brief general description followed by the specific ordering key and the drawings with the data tables.

If a subject is divided into several sections, the corresponding ordering key is located at the beginning of each section, followed by the pages with tables and pictures of that section (for example, on **page 19** and on **page 26,** there are two ordering keys for the Linear ball bearings but they belong to different families: compact series and standard series).

The composition of the ordering keys is not unambigous, due to the structural difference of the products. Instead it follows the type of the individual product.

To determine the product code to be used on the order, do the following:

After identifying the type of product required by examining the relevant pages containing the main data, it is necessary to prepare the code for the order. This may consist of pre-set options, ordering key boxes already filled in (for example: type, colour, etc.) and options that can be selected from several items, empty boxes (for example: design, bearing, nut type, stroke, length, etc.).

In the ordering key, the options are set out under the associated subjects, with the indication of the code or the information to be entered (with the measurement restrictions contained in the associated table). The sequence of the ordering key is defined by the thin guiding lines that select the corresponding box.

The individual ordering key may contain indications or special notes.

Examples are given at the end of each ordering key.

In the chapter for the actuators, the selection of the item's dynamic load/speed and motor option should be made by use of an additional table with several options located above the ordering key.

An example is given below to show how to prepare the order code for an LZ long linear table.

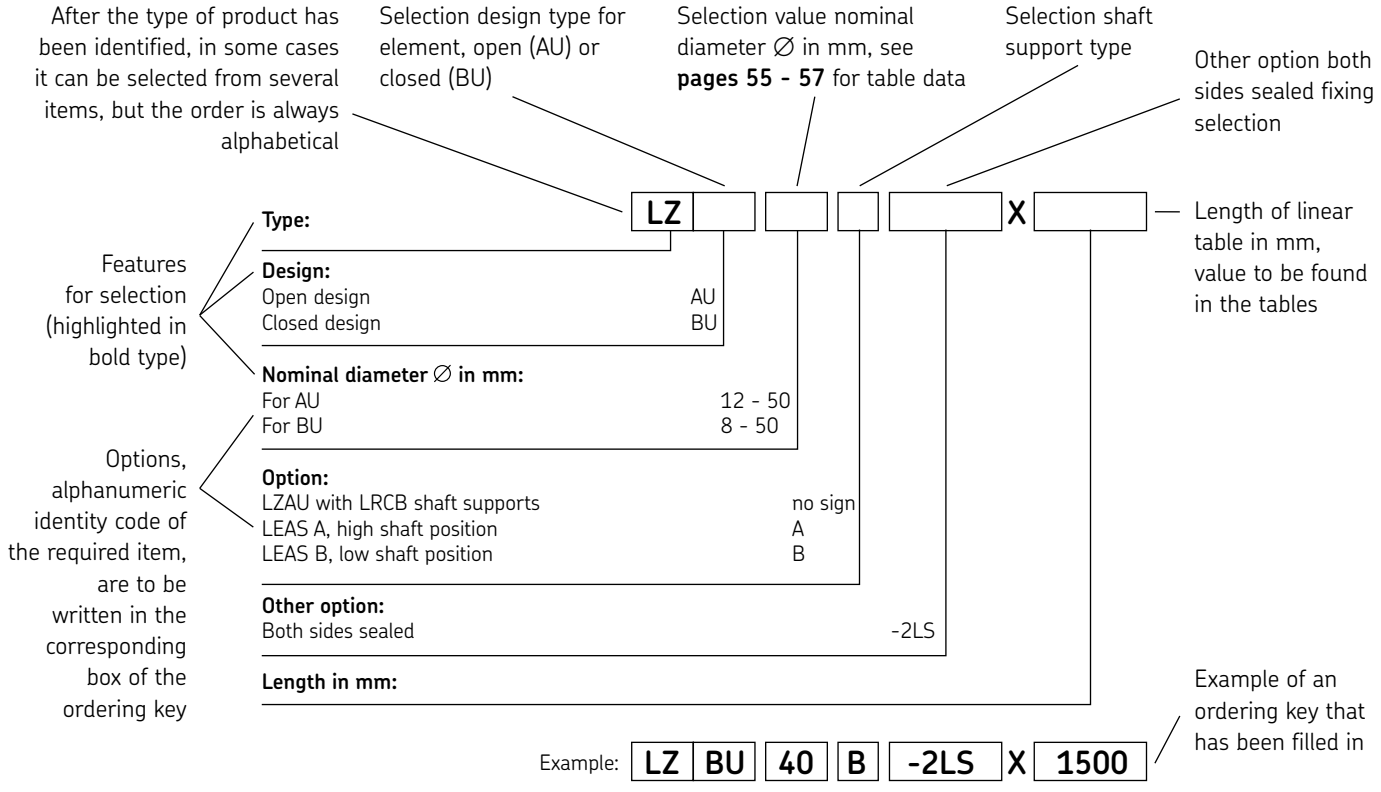

Light, steady and always on the run

The hummingbird is not only the world's smallest bird, but it is also the most stable, thanks to the incredible speed of its wings (eighty pulsations per second) that allow it to be suspended in flight, so allowing itself to feed on the delicious nectar from many of the flowers in Latin America.

Lightness and stability are among the features that have given SKF the inspiration to create lightweight linear ball bearings which are capable of accommodating loads with the greatest efficiency.

The potential derived from such lightness is truly impressive.

Linear guides

Fig. 1

Fig. 2

Fig. 3

Linear ball bearings (**fig. 1**), profile rail guides (**fig. 2**), miniature profile rail guides (**fig. 3**), precision rail guides (**fig. 4**): limited stroke, very high precision and performance capabilities.

Operating precision (**table 1**)
Comparison of the different positioning components and systems.

Fig. 4

Table 1

Operating precision (µm)	Linear guides	Ball & roller screws	Tables: driven and not driven
0,1-1	Precision rail guides; Standard slides	Roller screws; Ball screws; Linear motors	Standard drives or linear motors with all guiding systems
1-10	Linear ball bearings; Profile rail guides		
10-100			
100-1 000			

Shaft guidings

Fig. 5

Fig. 6

Fig. 7

Linear ball bearings (**fig. 5, 6** and **7**) are bushings with recirculating ball tracks which provide low friction movement and the possibility of unlimited stroke. With the range of linear ball bearings, plain bearings and accessories, it is possible to design and build economical and simple linear guidance systems to suit a wide range of applications. The bearings are available in two size ranges: the compact ISO 1 series and the heavy duty standard ISO 3 series (**table 2**).

N.B.:
SKF linear ball bearings and units for shaft diameter 6 mm and greater are factory prelubricated by default[1)].

[1)] linear ball bearings without factory pre-lubrication and preservative only can be ordered by using the suffix "/VT808", e.g. LBCR 20 A-2LS/VT808.

Table 2

	Type		Basic dynamic load rating	Stiffness	Speed	Precision
Linear ball bearings						
Compact	LBBR					
Standard	LBCR					
	LBCD					
	LBCT					
	LBCF					
	LBHT					
Linear plain bearings						
Compact	LPBR					
Standard	LPAR					
	LPAT					
Shafts						
	LJM		Standard CF 53			
	LJMH		Hard cromium plated			
	LJMR		Corrosion resistant			
	LJT		Hollow			
	LJMS		Corrosion resistant			

Compact series

LBBR
Compact linear ball bearings available in standard or corrosion resistant versions.

LUHR / LUJR
Linear ball bearing units with either integral seals or G-type seals mounted in the housing.

LTBR
Tandem linear ball bearing units with seals.

LTDR
Duo linear ball bearing units with seals.

LQBR
Quadro linear ball bearing units with seals.

LSHS
Shaft blocks for compact series.

LEBS and LEAS
Tandem shaft blocks suitable for LQBR and LQCD.

2 Linear guides
Shaft guidings

Standard series

LBCR
Closed linear ball bearings without self-aligning feature.

LBCT
Open linear ball bearings, not self-aligning.

LBHT
Heavy-load linear ball bearings, open type.

N.B.:
All LBC and LBH Linear ball bearings available in corrosion resistant!

LBCD
Self-aligning linear ball bearings, closed type.

LBCF
Self-aligning linear ball bearings, open type.

LUCD / LUCE
Self-aligning linear ball bearing units with adjustable preload.

LUCF
Open self-aligning linear ball bearing units with adjustable preload.

LUCT / BH
Heavy-load linear ball bearing units with adjustable preload.

LUND / LUNE
Self-aligning linear ball bearing units with adjustable preload

LUNF
Self-aligning linear ball bearing units, open type with adjustable preload.

LTCD / LTCF
Open or closed self-aligning tandem linear ball bearing units.

LQCD / LQCF
Open or closed self-aligning quadro linear ball bearing units.

LVCR
Flanged linear ball bearing units.

LSCS
Standard shaft blocks suitable for use with all linear bearing units.

LSNS
Shaft blocks suitable for use with all linear bearing units.

N.B.:
In addition to this catalogue, all product brochures are available on **www.skf.com** *as PDF files.*

Publication nr. 4182 EN

2 Linear guides
Shaft guidings

Table 3

Type	Size	Max load dynamic	static	Comments	ISO serie
	mm	N			
LBBR	3 to 50	6 950	6 300		1
LBCR	5 to 80	37 500	32 000		3
LBCD	12 to 50	11 200	6 950	Self-aligning*	3
LBCT	12 to 80	37 500	32 000		3
LBCF	12 to 50	11 200	6 950	Self-aligning*	3
LBHT	20 to 50	17 300	17 000		3
LPBR	12 to 50	10 800	38 000		1
LPAR	5 to 80	29 000	100 000		3
LPAT	12 to 80	29 000	100 000		3
Linear bearing units					
LUHR	12 to 50	6 950	6 300	LBBR bearing	1
LUJR	12 to 50	6 950	6 300	With shaft seals LBBR bearing	1
LTBR	12 to 50	11 400	12 700	Tandem LBBR bearing	1
LTDR	12 to 50	11 400	12 700	Duo LBBR bearing	1
LQBR	12 to 50	18 600	25 500	Quadro LBBR bearing	1
LUCR	8, 60, 80	37 500	32 000	LBCR bearing	3
LUCD	12 to 50	11 200	6 950	LBCD bearing self-aligning*	3
LUCS	8, 60, 80	37 500	32 000	LBCR bearing	3
LUCE	12 to 50	11 200	6 950	LBCD bearing self-aligning*	3
LUCT	60, 80	37 500	32 000	LBCT bearing	3
LUCF	12 to 50	11 200	6 950	LBCF bearing self-aligning*	3
LUCT ... BH	20 to 50	17 300	17 000	LBHT bearing	3
LUND	12 to 50	11 200	6 950	LBCD bearing self-aligning*	3
LUNE	12 to 50	11 200	6 950	LBCD bearing self-aligning*	3
LUNF	12 to 50	11 200	6 950	LBCF bearing self-aligning*	3
LVCR	12 to 80	37 500	32 000	LBCR bearing	3
LTCD	12 to 50	18 300	14 000	Tandem LBCD bearing self-aligning*	3
LTCF	12 to 50	18 300	14 000	Tandem LBCF bearing self-aligning*	3
LQCR	8	1 290	1 420	Quadro LBCR bearing	3
LQCD	12 to 50	30 000	28 000	Quadro LBCD bearing self-aligning*	3
LQCF	12 to 50	30 000	28 000	Quadro LBCF bearing self-aligning*	3
Shaft blocks					
LSCS	8 to 80				
LSHS	12 to 50			LSHS	1
LSNS	12 to 50			LSNS	3
LEBS A	12 to 50			Tandem LEBS A	1
LEAS ... A/B	8 to 50			LEAS A/B	3
Shafts and shaft supports					
LJ ...	3 to 80				
LRCB	12 to 80			LRCB (holes)	3
LRCC	12 to 80			LRCC (no holes)	
Linear tables					
LZAU	12 to 50			Quadro “supported shaft” LBCF bearing	3
LZBU ... A	8 to 50			Quadro “A” = “moving unit” “A” = “moving unit”	3
LZBU ... B	8 to 50			“B” = “moving shafts” LBCD bearing	

* Automatic compensation of shaft misalignments of up to max. ±30 angular minutes

Linear ball bearings/Linear bearing units

Ordering key

L	B	B	R	4	-2LS/HV6				

Type:

Bearing, units, shaft blocks:

Linear plain bearing	P
Linear ball bearing	B
Single unit, closed design	U
Tandem or duo unit	T
Quadro unit	Q
Shaft block	S
Tandem shaft block	E

Design (for seals on side see table at end page):

For P	(12 - 50)	BR
For B	Closed design (3 - 50)	BR
For U	Non standard (12 - 50)	BR
	Non standard (12 - 50)	ER
	Standard (12 - 50)	HR
	With shaft seals (12 - 50)	JR
	Self-aligning, clearance adjustable, closed design, relubricatable (12- 50)	CE
	Self-aligning, closed design, relubricatable (12 - 50)	ND
	Self-aligning, clearance adjustable, closed design, relubricatable (12- 50)	NE
For T	(12 - 50); tandem unit	BR
	(12 - 50); duo unit	DR
For Q	(12 - 50)	BR
For S	(12 - 50)	HS
For E	(12 - 50)	BS

Nominal diameter:
∅ in mm

Option(s):

Without seals	no sign
One side sealed	-LS
Both sides sealed	2-LS
Only valid for LBBR:	
Without seals, corrosion resistant	/HV6
One side sealed, corrosion resistant	-LS/HV6
Both sides sealed, corrosion resistant	-2LS/HV6
Only valid for LUBR, LUHR	PB
Only valid for LEBS	A

Only valid for LBBR:
Cassettes of 4 pieces for LBBR ∅ 3 - 5 only! (CAS4)

Lubrication option:
Only preservative, no pre-lubrication (∅ 6 - 50) /VT808

Example: L B B R 4 -2LS/HV6

Seals on ... side(s)	LPBR	LBBR	LUBR	LUER	LUHR	LUJR	LUCE	LUND	LUNE	LTBR	LTDR	LQBR	LSHS	LEBS
No	×	×	×	×	×	×	×	×	×	×	×	×	×	×
One	–	×	×	×	×	×	×	×	×	×	×	×	–	–
Both	–	×	×	×	×	×	×	×	×	×	×	×	–	–
Other options	–	/HV6	PB	–	PB	–	–	–	–	–	–	–	–	A

2 Linear guides
Shaft guidings – compact series

LBBR ..

Compact series 1
Linear ball bearings
LBBR (without seals)
-LS with one seal
-2LS with two seals

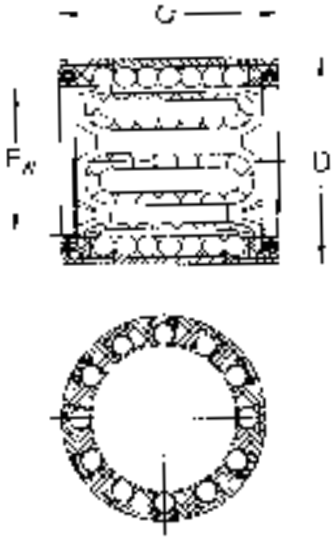

Designations	Dimensions			Basic load ratings dynamic	static
	F_w	D	C	C	C_0
	mm			N	
LBBR 3 (CAS4)*	3	7	10	60	44
LBBR 4 (CAS4)*	4	8	12	75	60
LBBR 5 (CAS4)*	5	10	15	170	129
LBBR 6A	6	12	22[1)]	335	270
LBBR 8	8	15	24	490	355
LBBR 10	10	17	26	585	415
LBBR 12	12	19	28	695	510
LBBR 14	14	21	28	710	530
LBBR 16	16	24	30	930	630
LBBR 20	20	28	30	1 160	800
LBBR 25	25	35	40	2 120	1 560
LBBR 30	30	40	50	3 150	2 700
LBBR 40	40	52	60	5 500	4 500
LBBR 50	50	62	70	6 950	6 300

Example:
LBBR 4 (CAS4)
LBBR 20-LS
LBBR 50-2LS

* Without seal, 4 pieces, packed in cassette (only valid for sizes 3, 4, 5)
[1)] Width 22 does not correspond to series 1 in ISO standard 10285

LBBR .. /HV6

Compact series 1
Corrosion resistant bearings
/HV6 without seals
-2LS/HV6 with two seals

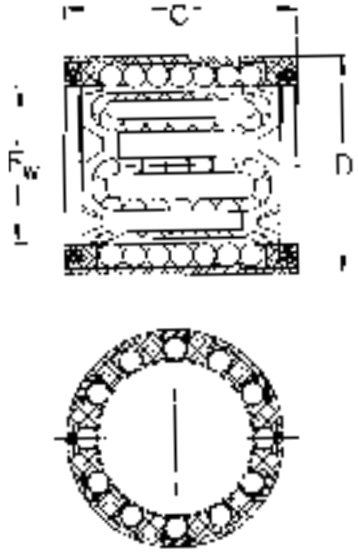

Designations	Dimensions			Basic load ratings dynamic	static
	F_w	D	C	C	C_0
	mm			N	
LBBR 3/HV6 (CAS 4)*	3	7	10	60	44
LBBR 4/HV6 (CAS 4)*	4	8	12	75	60
LBBR 5/HV6 (CAS 4)*	5	10	15	170	129
LBBR 6A/HV6	6	12	22[1)]	335	270
LBBR 8/HV6	8	15	24	490	355
LBBR 10/HV6	10	17	26	585	415
LBBR 12/HV6	12	19	28	695	510
LBBR 14/HV6	14	21	28	710	530
LBBR 16/HV6	16	24	30	930	630
LBBR 20/HV6	20	28	30	1 160	800
LBBR 25/HV6	25	35	40	2 120	1 560
LBBR 30/HV6	30	40	50	3 150	2 700
LBBR 40/HV6	40	52	60	5 500	4 500
LBBR 50/HV6	50	62	70	6 950	6 300

Example:
LBBR 4/HV6 (CAS4)
LBBR 50-2LS/HV6

* Without seal, 4 pieces, packed in cassette (only valid for sizes 3, 4, 5)
[1)] Width 22 does not correspond to series 1 in ISO standard 10285

LPBR ..

Linear plain bearings

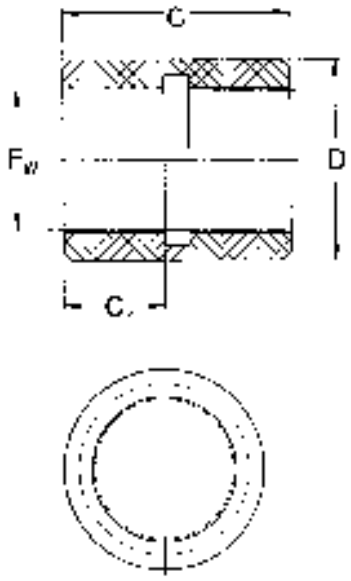

Designations	Dimensions				Basic load ratings dynamic		static
	F_w	D	C	C_4	C 0,1 m/s	C 4 m/s	C_0
	mm				N		
LPBR 12	12	19,19	28	10	965	24	3 350
LPBR 16	16	24,23	30	12	1 530	38	5 400
LPBR 20	20	28,24	30	13	2 080	52	7 350
LPBR 25	25	35,25	40	17	3 400	85	12 000
LPBR 30	30	40,27	50	20	4 800	120	17 000
LPBR 40	40	52,32	60	24	7 650	193	27 000
LPBR 50	50	62,35	70	27	10 800	270	38 000

LUHR ..

Linear ball bearing units
LUHR (without seals)
-2LS with 2 seals

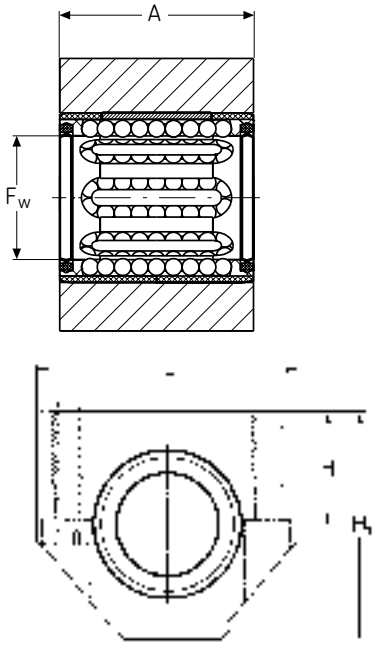

Designations	Dimensions					Basic load ratings dynamic	static
	F_w	D	C	H ±0,01	H_1	C	C_0
	mm					N	
LUHR 12	12	28	17	33	40	695	510
LUHR 16	16	30	19	38	45	930	630
LUHR 20	20	30	23	45	53	1 160	800
LUHR 25	25	40	27	54	62	2 120	1 560
LUHR 30	30	50	30	60	67	3 150	2 700
LUHR 40	40	60	39	76	87	5 500	4 500
LUHR 50	50	70	47	92	103	6 950	6 300

Example:
LUHR 16
LUHR 30-2LS

2 Linear guides
Shaft guidings – compact series

LUHR .. PB

Linear plain bearing units without seals

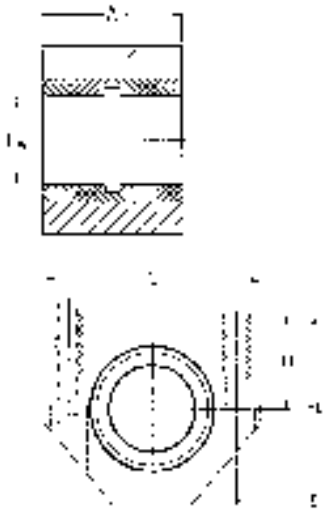

Designations	Dimensions					Basic load ratings dynamic		static
	F_w	A	H ±0,01	H_1	L	C 0,1 m/s	C 4 m/s	C_0
	mm					N		
LUHR 12 PB	12	28	17	33	40	965	24	3 350
LUHR 16 PB	16	30	19	38	45	1 530	38	5 400
LUHR 20 PB	20	30	23	45	53	2 080	52	7 350
LUHR 25 PB	25	40	27	54	62	3 400	85	12 000
LUHR 30 PB	30	50	30	60	67	4 800	120	17 000
LUHR 40 PB	40	60	39	76	87	7 650	193	27 000
LUHR 50 PB	50	70	47	92	103	10 800	270	38 000

LUJR ..

Linear ball bearing units with shaft seals

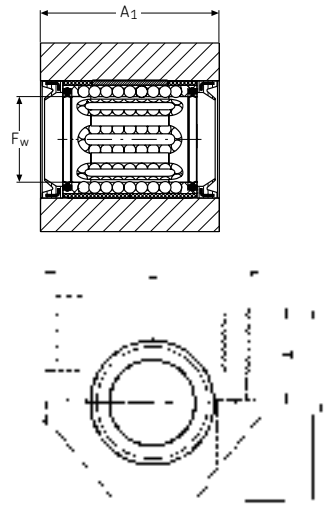

Designations	Dimensions					Basic load ratings dynamic	static
	F_w	A	H ±0,01	H_1	L	C	C_0
	mm					N	
LUJR 12	12	35	17	33	40	695	510
LUJR 16	16	37	19	38	45	930	630
LUJR 20	20	39	23	45	53	1 160	800
LUJR 25	25	49	27	54	62	2 120	1 560
LUJR 30	30	59	30	60	67	3 150	2 700
LUJR 40	40	71	39	76	87	5 500	4 500
LUJR 50	50	81	47	92	103	6 950	6 300

LTBR ..

Tandem linear ball bearing units
LTBR (without seals)
-2LS with two seals

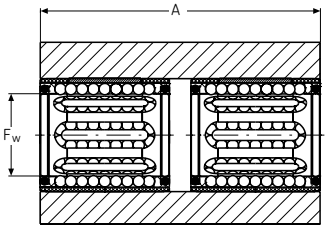

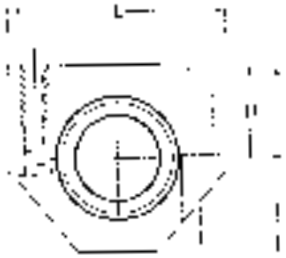

Designations	Dimensions					Basic load ratings dynamic	static
	F_w	A	H ±0,01	H_1	L	C	C_0
	mm					N	
LTBR 12	12	60	17	33	40	1 140	1 020
LTBR 16	16	65	19	38	45	1 530	1 270
LTBR 20	20	65	23	45	53	1 900	1 600
LTBR 25	25	85	27	54	62	3 450	3 150
LTBR 30	30	105	30	60	67	5 200	5 400
LTBR 40	40	125	39	76	87	9 000	9 000
LTBR 50	50	145	47	92	103	11 400	12 700

Example:
LTBR 16
LTBR 30-2LS

LSHS ..

Shaft block for compact series

Designations	Dimensions				
	F_w	A	H ±0,01	H_2	L
	mm				
LSHS 12	12	18	19	33	40
LSHS 16	16	20	22	38	45
LSHS 20	20	24	25	45	53
LSHS 25	25	28	31	54	62
LSHS 30	30	30	34	60	67
LSHS 40	40	40	42	76	87
LSHS 50	50	50	50	92	103

2 Linear guides
Shaft guidings – compact series

LTDR ..

Duo linear ball bearing units
LTDR (without seals)
-2LS with four seals

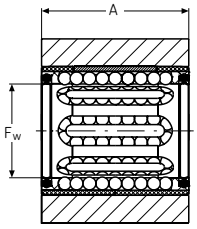

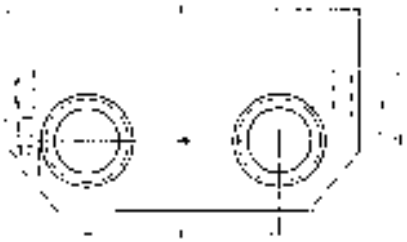

Designations	Dimensions						Basic load ratings dynamic	static
	F_w	A	H ±0,01	H_1	L	L_1	C	C_0
	mm						N	
LTDR 12	12	28	15	30	80	40	1 140	1 020
LTDR 16	16	30	17.5	35	96	52	1 530	1 270
LTDR 20	20	30	20	40	115	63	1 900	1 600
LTDR 25	25	40	25	50	136	75	3 450	3 150
LTDR 30	30	50	28	56	146	80	5 200	5 400
LTDR 40	40	60	35	70	184	97	9 000	9 000
LTDR 50	50	70	40	80	210	107	11 400	12 700

Example:
LTDR 12
LTDR 25-2LS

LQBR ..

Quadro linear ball bearing units
LQBR (without seals)
-2LS with four seals

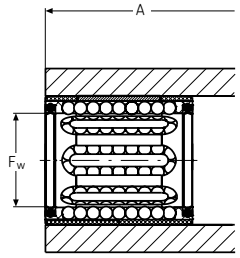

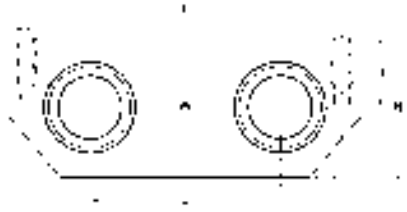

Designations	Dimensions						Basic load ratings dynamic	static
	F_w	A	H ±0,01	H_1	L	L_1	C	C_0
	mm						N	
LQBR 12	12	70	15	30	80	40	1 860	2 040
LQBR 16	16	80	17.5	35	96	52	2 500	2 550
LQBR 20	20	85	20	40	115	63	3 100	3 200
LQBR 25	25	100	25	50	136	75	5 600	6 300
LQBR 30	30	130	28	56	146	80	8 500	10 800
LQBR 40	40	150	35	70	184	97	14 600	18 000
LQBR 50	50	175	40	80	210	107	18 600	25 500

Example:
LQBR 40
LQBR 30-2LS

LEBS ..

Tandem shaft blocks suitable for LQBR and LTDR

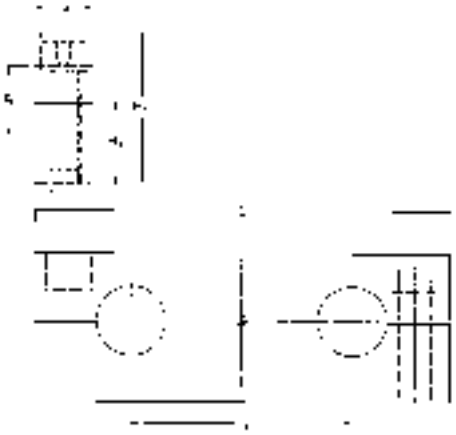

Designations	Dimensions					
	D_a	A	H_A ±0,01	H_1	L	L_1
	mm					
LEBS 12 A	12	15	17	30	80	40
LEBS 16 A	16	15	19,5	35	96	52
LEBS 20 A	20	18	22	40	115	63
LEBS 25 A	25	20	27	50	136	75
LEBS 30 A	30	20	31	56	146	80
LEBS 40 A	40	25	38	70	184	97
LEBS 50 A	50	30	43	80	210	107

Appropriate special seals

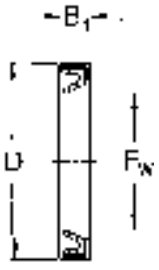

Designations	Dimensions		
	F_w	D	B_1
	mm		
SP-6×12×2	6	22	2
SP-8×15×3	8	15	3
SP-10×17×3	10	17	3
SP-12×19×3	12	19	3
SP-14×21×3	14	21	3
SP-16×24×3	16	24	3
SP-20×28×4	20	28	4
SP-25×35×4	25	35	4
SP-30×40×4	30	40	4
SP-40×52×5	40	52	5
SP-50×62×5	50	62	5

2 Linear guides

Shaft guidings – standard series

Ordering key

L | | | | | | | | |

Type

Bearing, units, shaft blocks:

Linear plain bearing	P
Linear ball bearing	B
Single unit	U
Flanged unit	V
Tandem unit	T
Quadro unit	Q
Shaft block	S
Tandem shaft block	E
Shaft support	R

Design (for seals on side see table at end page):

For P	Closed design (5 - 80)	AR
	Open design (12 - 80)	AT
For B*	Self-aligning, closed design (12 - 50)	CD
	Self-aligning, open design (12 - 50)	CF
	Closed design (5 - 80)	CR
	Open design (12 - 80)	CT
	Heavy load, open design (20 - 50)	HT
For U	Self-aligning, closed design, relubricatable (12 - 50)	CD
	Self-aligning, radial adjustable, slotted design, relubricatable (12 - 50)	CE
	Self-aligning, clearance adjustable, open design, relubricatable (12 - 50)	CF
	Closed design, (relubricatable) (8 - 80)	CR
	Clearance adjustable, closed design, relubricatable (8 - 80)	CS
	Clearance adjustable, open design, relubricatable (12 - 80)	CT
	Self-aligning, clearance adjustable, closed design, relubricatable (12 - 50)	ND
	Self-aligning, clearance adjustable, slotted design, relubricatable (12 - 50)	NE
	Self-aligning, clearance adjustable, open design, relubricatable (12 - 50)	NF

Nominal diameter:

∅ in mm

New bearing series* (for linear ball bearings only) A

Option(s):

Without seals	no sign
One side sealed	-LS
Both sides sealed	-2LS
For B* Without seals, corrosion resistant (for linear ball bearings only)	/HV6
For B* One side sealed, corrosion resistant (for linear ball bearings only)	-LS/HV6
For B* Both sides sealed, corrosion resistant (for linear ball bearings only)	-2LS/HV6

Other option:

Only valid for LUCR, LUCT:	
With plain bearing, without seals	PA
Only valid for LUCT:	
With heavy-load bearing, without seals	BH
With heavy-load bearing, both sides sealed	BH-2LS
Only valid for LEAS:	
Tandem shaft block, high shaft position	A
Tandem shaft block, low shaft position	B

Lubrication option:

only preservative, no pre-lubrication (∅ 6 - 50) /VT808

Example: L | U | C | T | 30 | | BH-2LS |

Seals on ... side(s)	LPAR	LPAT	LBCD	LBCF	LBCR	LBCT	LBHT	LUCD	LUCE	LUCF	LUCR	LUCS	LUCT	LUND	LUNE	LUNF
No	×	×	×	×	×	×	×	×	×	×	×	×	×	×	×	×
One	–	–	×	×	×	×	×	×	×	×	×	×	×	×	×	×
Both	–	–	×	×	×	×	×	×	×	×	×	×	×	×	×	×
Other options	–	–	–	–	–	–	–	–	–	–	PA	–	BH or PA	–	–	–

Ordering key (Continued)

L						

Type

Bearing, units, shaft blocks:

Linear plain bearing	P
Linear ball bearing	B
Single unit	U
Flanged unit	V
Tandem unit	T
Quadro unit	Q
Shaft block	S
Tandem shaft block	E
Shaft support	R

Design (for seals on side see table at end page):

For V	Self-aligning, closed design (12 - 50)	CD
	Closed design (12 - 80)	CR
For T	Self-aligning, closed design, relubricatable (12 - 50)	CD
	Self-aligning, open design, relubricatable (12 - 50)	CF
	Closed design, relubricatable (12 - 50)	CR
	Open design, relubricatable (12 - 50)	CT
For Q	Self-aligning, closed design, relubricatable (12 - 50)	CD
	Self-aligning, open design, relubricatable (12 - 50)	CF
	Closed design, relubricatable (8 - 50)	CR
	Open design, relubricatable (12 - 50)	CT
For S	(8 - 80)	CS
	(12 - 50)	NS
For E	(8 - 50)	AS
For R	Without bore holes (12 - 80)	CB
	With bore holes (12 - 80)	CC

Nominal diameter:
∅ in mm

Option(s):

Without seals	no sign
One side sealed	-LS
Both sides sealed	-2LS

Other option:

Only valid for LUCR, LUCT:	
With plain bearing, without seals	PA
Only valid for LUCT:	
With heavy-load bearing, without seals	BH
With heavy-load bearing, both sides sealed	BH-2LS
Only valid for LEAS:	
Tandem shaft block, high shaft position	A
Tandem shaft block, low shaft position	B

Lubrication option:

only preservative, no pre-lubrication (∅ 6 - 50)	/VT808

Example: | L | Q | C | R | 16 | -2LS | |

Seals on ... side(s)	LVCD	LVCR	LTCD	LTCF	LTCR	LTCT	LQCD	LQCF	LQCR	LQCT	LSCS	LSNS	LEAS	LRCB	LRCC	LUNF
No	×	×	×	×	×	×	×	×	×	×	×	×	×	×	×	×
One	×	×	×	×	×	×	×	×	×	×	–	–	–	–	–	×
Both	×	×	×	×	×	×	×	×	×	×	–	–	–	–	–	×
Other options	–	–	–	–	–	–	–	–	–	–	–	–	B or A	–	–	–

2 Linear guides
Shaft guidings – standard series, closed types

LBCD ..

Standard series 3
Linear ball bearings self-aligning, closed type
LBCD ..A (without seals)
-LS with one seal
-2LS with two seals

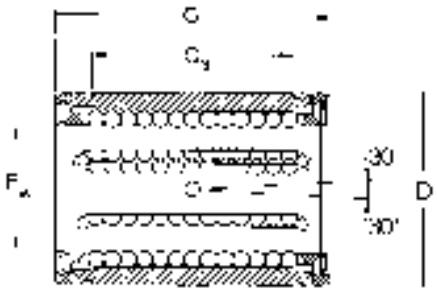

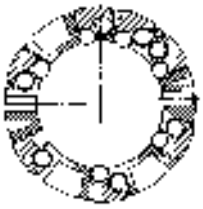

Designations	Dimensions				Basic load ratings dynamic	static
	F_w	D	C	C_3	C	C_0
	mm				N	
LBCD 12 A	12	22	32	20	1 080	815
LBCD 16 A	16	26	36	22	1 320	865
LBCD 20 A	20	32	45	28	2 000	1 370
LBCD 25 A	25	40	58	40	2 900	2 040
LBCD 30 A	30	47	68	48	4 650	3 250
LBCD 40 A	40	62	80	56	7 800	5 200
LBCD 50 A	50	75	100	72	11 200	6 950

Example:
LBCD 25 A
LBCD 16 A-LS
LBCD 40 A-2LS

LBCR ..

Standard series 3
Linear ball bearings, closed type
LBCR .. A (without seals)
-LS with one seal
-2LS with two seals

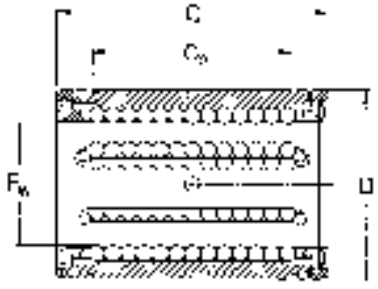

Designations	Dimensions				Basic load ratings dynamic	static
	F_w	D	C	C_3	C	C_0
	mm				N	
LBCR 5 A	5	22	22	12	280	210
LBCR 8 A	8	16	25	14	490	355
LBCR 12 A	12	22	32	20	1 160	980
LBCR 16 A	16	26	36	22	1 500	1 290
LBCR 20 A	20	32	45	28	2 240	2 040
LBCR 25 A	25	40	58	40	3 350	3 350
LBCR 30 A	30	47	68	48	5 600	5 700
LBCR 40 A	40	62	80	56	9 000	8 150
LBCR 50 A	50	75	100	72	13 400	12 200
LBCR 60 A	60	90	125	95	20 400	18 000
LBCR 80 A	80	120	165	125	37 500	32 000

Example:
LBCR 30 A
LBCR 80 A-LS
LBCR 60 A-2LS

N.B.:
All LBC.. A and LBH .. A Linear ball bearings available in corrosion resistant!

LPAR ..

Linear plain bearings without seals, closed type

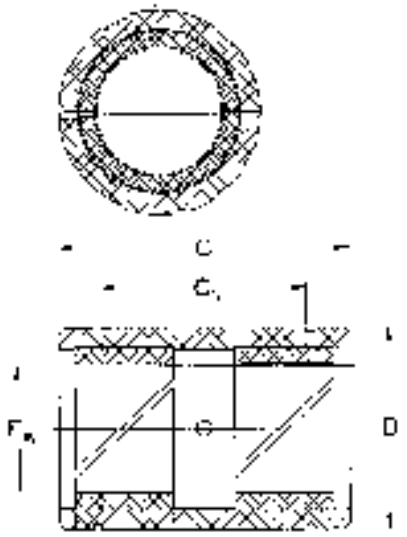

Designations	Dimensions				Basic load ratings dynamic		static
	F_w	D	C	C_3	C 0,1 m/s	C 4 m/s	C_0
	mm				N		
LPAR 5	5	22	22	12	280	7	980
LPAR 8	8	16	25	14	510	13	1 800
LPAR 12	12	22	32	20	965	24	3 350
LPAR 16	16	26	36	22	1 530	38	5 400
LPAR 20	20	32	45	28	2 400	60	8 300
LPAR 25	25	40	58	40	4 000	100	14 000
LPAR 30	30	47	68	48	5 500	137	19 300
LPAR 40	40	62	80	56	8 000	200	28 000
LPAR 50	50	75	100	72	12 000	300	41 500
LPAR 60	60	90	125	95	16 600	415	60 000
LPAR 80	80	120	165	125	290 000	720	100 000

LUCD ..

Single units, self-aligning, closed type, relubricatable
LUCD (without seals)
-2LS with two seals

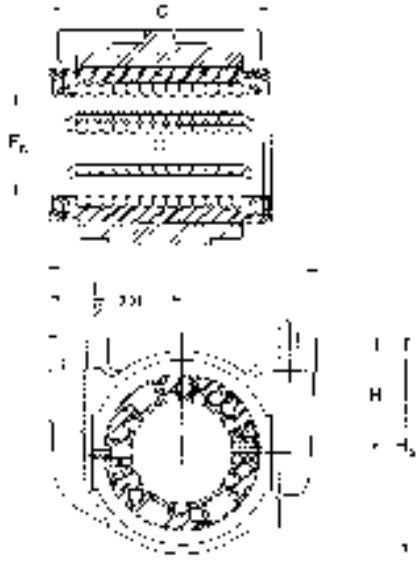

Designations	Dimensions					Basic load ratings dynamic	static
	F_w	C	H ±0,01	H_2	L	C	C_0
	mm					N	
LUCD 12	12	32	18	34.5	52	1 080	815
LUCD 16	16	36	22	40.5	56	1 320	865
LUCD 20	20	45	25	48	70	2 000	1 370
LUCD 25	25	58	30	58	80	2 900	2 040
LUCD 30	30	68	35	67	88	4 650	3 250
LUCD 40	40	80	45	85	108	7 800	5 200
LUCD 50	50	100	50	99	135	11 200	6 950

Example:
LUCD 40
LUCD 12-2LS

2 Linear guides

Shaft guidings – standard series, closed types

LUCE ..

Single units, self-aligning, clearance adjustable, closed type, relubricatable
LUCE (without seals)
-2LS with two seals

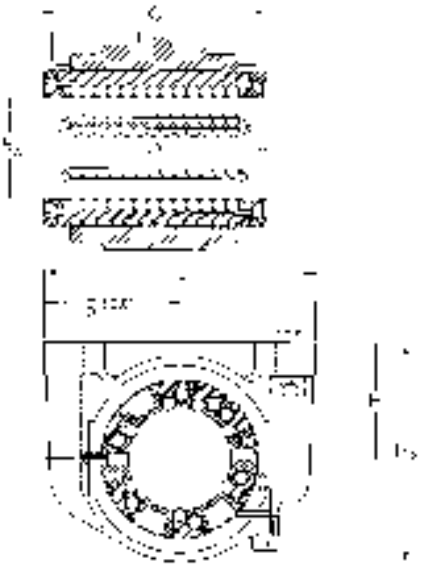

Designations	Dimensions					Basic load ratings dynamic	static
	F_w	C	H ±0,01	H_2	L	C	C_0
	mm					N	
LUCE 12	12	32	18	34,5	52	1 080	815
LUCE 16	16	36	22	40,5	56	1 320	865
LUCE 20	20	45	25	48	70	2 000	1 370
LUCE 25	25	58	30	58	80	2 900	2 040
LUCE 30	30	68	35	67	88	4 650	3 250
LUCE 40	40	80	45	85	108	7 800	5 200
LUCE 50	50	100	50	99	135	11 200	6 950

Example:
LUCE 25
LUCE 50-2LS

LUCR ..

Single units, closed type, relubricatable
LUCR (without seals)
-2LS with two seals

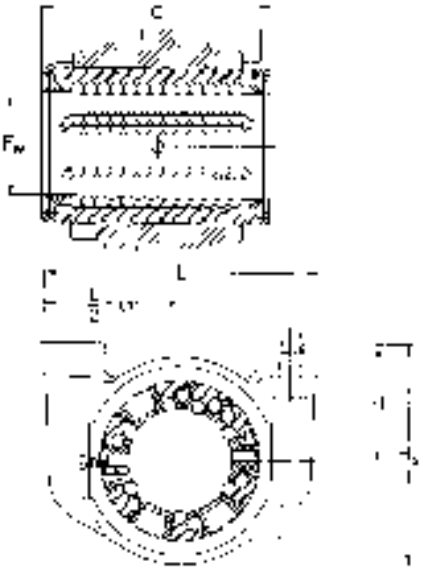

Designations	Dimensions					Basic load ratings dynamic	static
	F_w	C	H ±0,01	H_2	L	C	C_0
	mm					N	
LUCR 8*	8	25	15	28	45	365	285
LUCR 12	12	32	18	34,5	52	1 080	815
LUCR 16	16	36	22	40,5	56	1 320	865
LUCR 20	20	45	25	48	70	2 000	1 370
LUCR 25	25	58	30	58	80	2 900	2 040
LUCR 30	30	68	35	67	88	4 650	3 250
LUCR 40	40	80	45	85	108	7 800	5 200
LUCR 50	50	100	50	99	135	11 200	6 950
LUCR 60	60	125	60	118	560	20 400	18 000
LUCR 80	80	165	80	158	205	37 500	32 000

Example:
LUCR 80
LUCR 8-2LS

* Linear ball bearings fitted to these units are secured with snap rings according to DIN 471 and cannot be relubricated.

LUCR .. PA

Single plain bearing units without seals, closed type

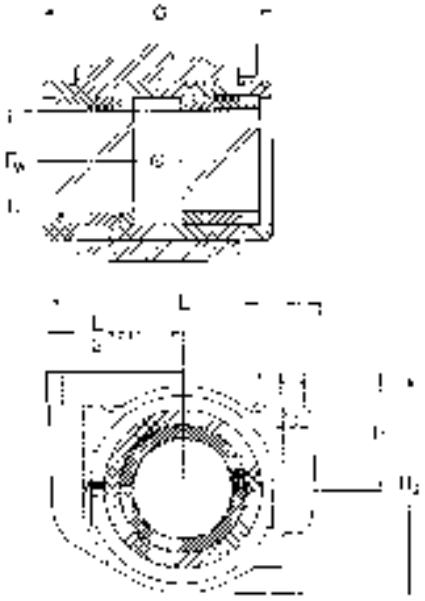

Designations	Dimensions					Basic load ratings dynamic		static
	F_w	C	H ±0,01	H_2	L	C 0,1 m/s	C 4 m/s	C_0
	mm					N		
LUCR 8 PA	8	25	15	28	45	510	13	1 800
LUCR 12 PA	12	32	18	34,5	52	965	24	3 350
LUCR 16 PA	16	36	22	40,5	56	1 530	38	5 400
LUCR 20 PA	20	45	25	48	70	2 400	60	8 300
LUCR 25 PA	25	58	30	58	80	4 000	100	14 000
LUCR 30 PA	30	68	35	67	88	5 500	137	19 300
LUCR 40 PA	40	80	45	85	108	8 000	200	28 000
LUCR 50 PA	50	100	50	99	135	12 000	300	41 500
LUCR 60 PA	60	125	60	118	160	16 600	415	60 000
LUCR 80 PA	80	165	80	158	205	29 000	720	100 000

Delivery time on request

LUCS ..

Single units, clearance adjustable, closed type, relubricatable
LUCS (without seals)
-2LS with two seals

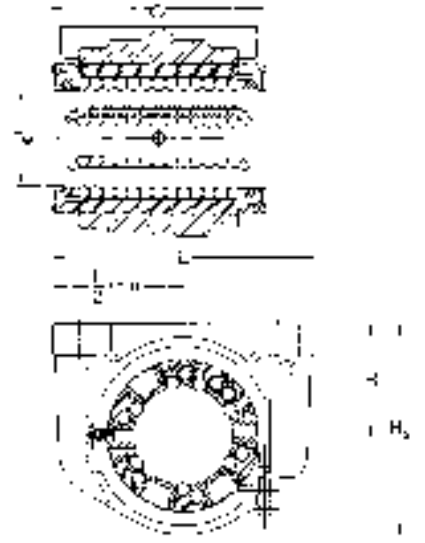

Designations	Dimensions					Basic load ratings dynamic	static
	F_w	C	H ±0,01	H_2	L	C	C_0
	mm					N	
LUCS 8*	8	25	15	28	45	490	355
LUCS 12	12	32	18	34,5	52	1 160	980
LUCS 16	16	36	22	40,5	56	1 500	1 290
LUCS 20	20	45	25	48	70	2 240	2 040
LUCS 25	25	58	30	58	80	3 350	3 350
LUCS 30	30	68	35	67	88	5 600	5 700
LUCS 40	40	80	45	85	108	9 000	8 150
LUCS 50	50	100	50	99	135	13 400	12 200
LUCS 60	60	125	60	118	160	20 400	18 000
LUCS 80	80	165	80	158	205	37 500	32 000

Example:
LUCS 50
LUCS 60-2LS

* Linear ball bearings fitted to these units are secured with snap rings according to DIN 471 and cannot be relubricated.

2 Linear guides
Shaft guidings – standard series, closed types

LUND ..

Single units, self-aligning, closed type, relubricatable
LUND (without seals)
-2LS with two seals

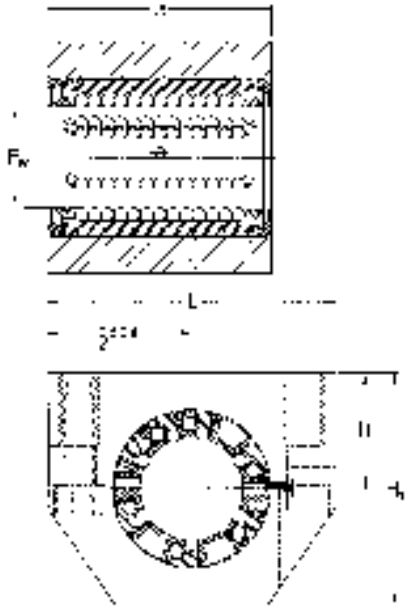

Designations	Dimensions					Basic load ratings dynamic	static
	F_w	A	H ±0,01	H_1	L	C	C_0
	mm					N	
LUND 12	12	32	18	35	43	1 080	815
LUND 16	16	37	22	42	53	1 320	865
LUND 20	20	45	25	50	60	2 000	1 370
LUND 25	25	58	30	61	78	2 900	2 040
LUND 30	30	68	35	70	87	4 650	3 250
LUND 40	40	80	45	90	108	7 800	5 200
LUND 50	50	100	50	105	132	11 200	6 950

Example:
LUND 12
LUND 30-2LS

LUNE ..

Single units, self-aligning, clearance adjustable, closed type, relubricatable
LUNE (without seals)
-2LS with two seals

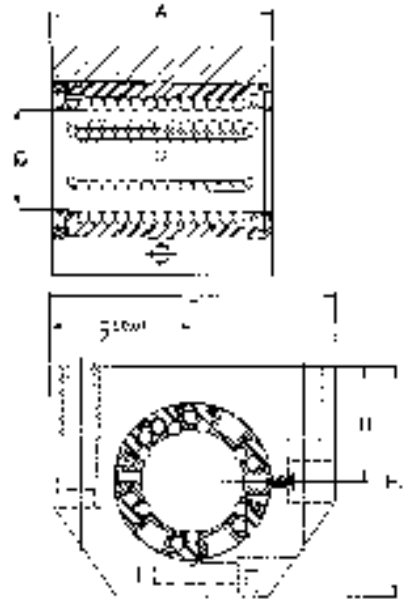

Designations	Dimensions					Basic load ratings dynamic	static
	F_w	A	H ±0,01	H_1	L	C	C_0
	mm					N	
LUNE 12	12	32	18	35	43	1 080	815
LUNE 16	16	37	22	42	53	1 320	865
LUNE 20	20	45	25	50	60	2 000	1 370
LUNE 25	25	58	30	61	78	2 900	2 040
LUNE 30	30	68	35	70	87	4 650	3 250
LUNE 40	40	80	45	90	108	7 800	5 200
LUNE 50	50	100	50	105	132	11 200	6 950

Example:
LUNE 40
LUNE 16-2LS

LVCD ..

Flanged self-aligning units
LVCD (without seals)
-2LS with two seals

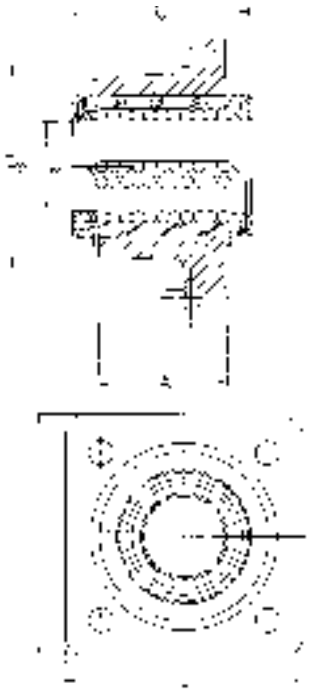

Designations	Dimensions					Basic load ratings dynamic	static
	F_w	A	C	L	D_2	C	C_0
	mm					N	
LVCD 12	12	20	32	42	32	1 080	815
LVCD 16	16	22	36	50	38	1 320	865
LVCD 20	20	28	45	60	46	2 000	1 370
LVCD 25	25	40	58	74	58	2 900	2 040
LVCD 30	30	48	68	84	66	4 650	3 250
LVCD 40	40	56	80	108	90	7 800	5 200
LVCD 50	50	72	100	130	110	11 200	6 950

Example:
LVCD 12
LVCD 30-2LS

LVCR ..

Flanged units
LVCR (without seals)
-2LS with two seals

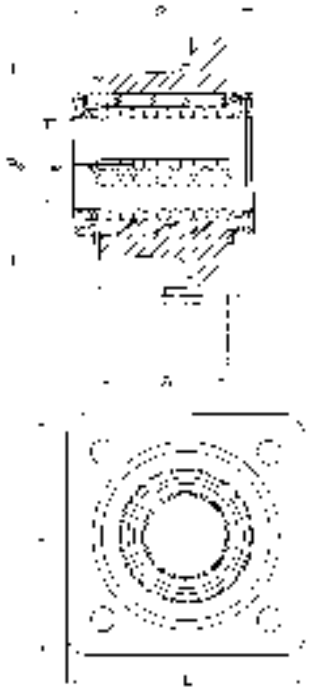

Designations	Dimensions					Basic load ratings dynamic	static
	F_w	A	C	L	D_2	C	C_0
	mm					N	
LVCR 12	12	20	32	42	32	1 160	980
LVCR 16	16	22	36	50	38	1 500	1 290
LVCR 20	20	28	45	60	46	2 240	2 040
LVCR 25	25	40	58	74	58	3 350	3 350
LVCR 30	30	48	68	84	66	5 600	5 700
LVCR 40	40	56	80	108	90	9 000	8 150
LVCR 50	50	72	100	130	110	13 400	12 200
LVCR 60	60	95	125	160	135	20 400	18 000
LVCR 80	80	125	165	200	180	37 500	32 000

Example:
LVCR 20
LVCR 60-2LS

Delivery time on request

2 Linear guides
Shaft guidings – standard series, closed types

LSCS ..

Shaft blocks

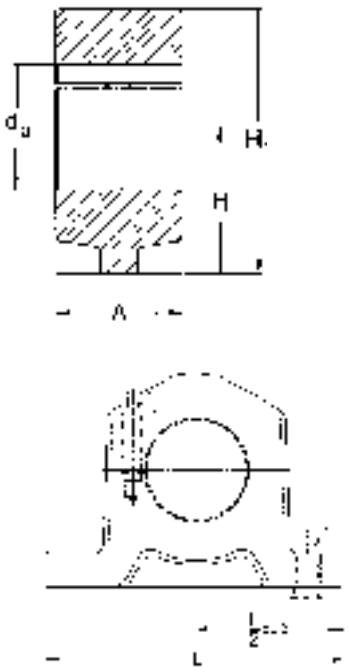

Designations	Dimensions				
	F_w	A	H ±0,01	H_2	L
	mm				
LSCS 8	8	10	15	25	45
LSCS 12	12	12	20	32,5	52
LSCS 16	16	15	20	35,5	56
LSCS 20	20	20	25	43,5	70
LSCS 25	25	28	30	53	80
LSCS 30	30	30	35	63	88
LSCS 40	40	36	45	81	108
LSCS 50	50	49	50	92,5	135
LSCS 60	60	62	60	112	160
LSCS 80	80	85	80	147,5	205

LSNS ..

Shaft blocks

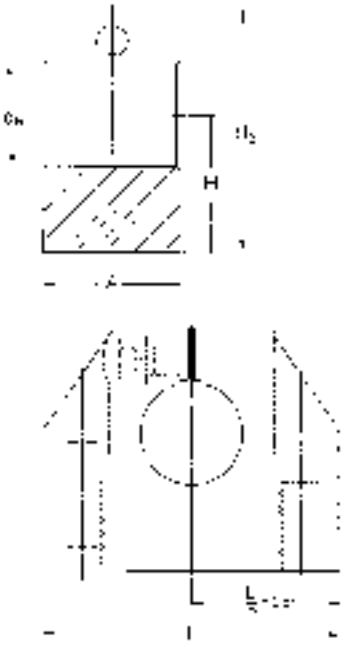

Designations	Dimensions				
	F_w	A	H ±0,01	H_2	L
	mm				
LSNS 12	12	20	20	35	43
LSNS 16	16	24	25	42	53
LSNS 20	20	30	30	50	60
LSNS 25	25	38	35	61	78
LSNS 30	30	40	40	70	87
LSNS 40	40	48	50	90	108
LSNS 50	50	58	60	105	132

LTCD ..

Tandem units, self-aligning, closed type, relubricatable
LTCD (without seals)
-2LS with two seals

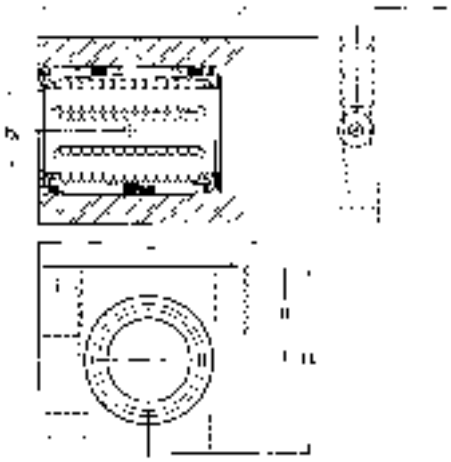

Designations	Dimensions					Basic load ratings dynamic	static
	F_w	A	H ±0,01	H_1	L	C	C_0
	mm					N	
LTCD 12	12	76	18	35	42	1 760	1 630
LTCD 16	16	84	22	41,5	50	2 160	1 730
LTCD 20	20	104	25	49,5	60	3 200	2 750
LTCD 25	25	130	30	59,5	74	4 750	4 150
LTCD 30	30	152	35	69,5	84	7 500	6 550
LTCD 40	40	176	45	89,5	108	12 700	10 400
LTCD 50	50	224	50	99,5	130	18 300	14 000

Example:
LTCD 30
LTCD 12-2LS

LTCR ..

Tandem units, closed type, relubricatable
LTCR (without seals)
-2LS with two seals

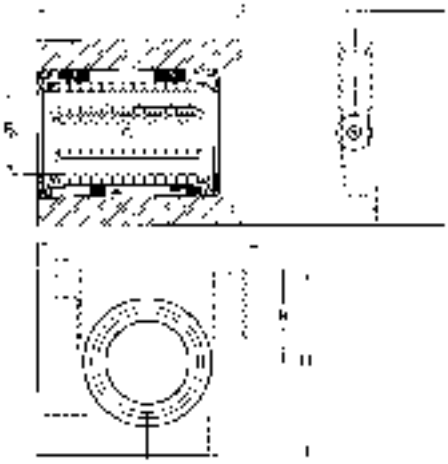

Designations	Dimensions					Basic load ratings dynamic	static
	F_w	A	H ±0,01	H_1	L	C	C_0
	mm					N	
LTCR 12	12	76	18	35	42	1 900	1 960
LTCR 16	16	84	22	41,5	50	2 450	2 600
LTCR 20	20	104	25	49,5	60	3 650	4 150
LTCR 25	25	130	30	59,5	74	5 500	6 700
LTCR 30	30	152	35	69,5	84	9 150	11 400
LTCR 40	40	176	45	89,5	108	15 000	16 300
LTCR 50	50	224	50	99,5	130	22 000	24 500

Example:
LTCR 50
LTCR 20-2LS

2 Linear guides
Shaft guidings – standard series, closed types

LQCD ..

Quadro units, self-aligning, closed type, relubricatable
LQCD (without seals)
-2LS with four seals

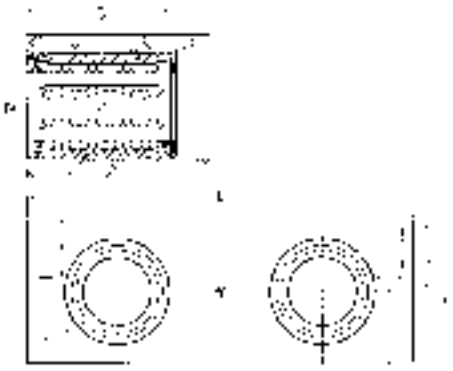

Designations	Dimensions					Basic load ratings dynamic	static
	F_w	A	H ±0,01	H_1	L	C 0,1 m/s	C_0
	mm					N	
LQCD 12	12	32	16	32	85	2 850	3 250
LQCD 16	16	36	18	36	100	3 450	3 450
LQCD 20	20	45	23	46	130	5 200	5 500
LQCD 25	25	58	28	56	160	7 650	8 150
LQCD 30	30	68	32	64	180	12 200	12 900
LQCD 40	40	80	40	80	230	20 800	20 800
LQCD 50	50	100	48	96	280	30 000	28 000

Example:
LQCD 40
LQCD 16-2LS

LQCR ..

Quadro units, closed type, relubricatable
LQCR (without seals)
-2LS with four seals

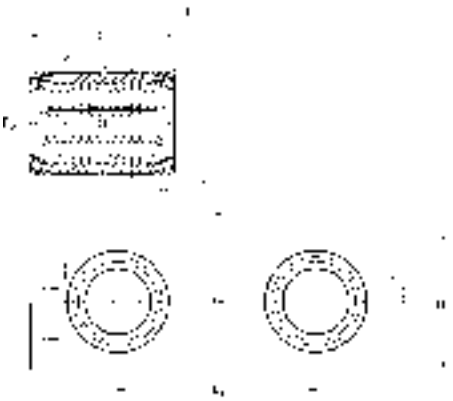

Designations	Dimensions						Basic load ratings dynamic	static
	F_w	C	H ±0,01	H_1	L	L_1	C	C_0
	mm						N	
LQCR 8	8	25	11,5	23	65	32	1 290	1 420
LQCR 12	12	32	16	32	85	42	3 100	4 000
LQCR 16	16	36	18	36	100	54	4 000	5 200
LQCR 20	20	45	23	46	130	72	6 000	8 300
LQCR 25	25	58	28	56	160	88	9 000	13 400
LQCR 30	30	68	32	64	180	96	14 800	22 800
LQCR 40	40	80	40	80	230	122	23 800	32 600
LQCR 50	50	100	48	96	280	152	35 400	48 800

Example:
LQCR 25
LQCR 12-2LS

LEAS ..

Tandem shaft blocks, closed type, suitable for LQCD / LQCR
LEAS .. A high shaft position

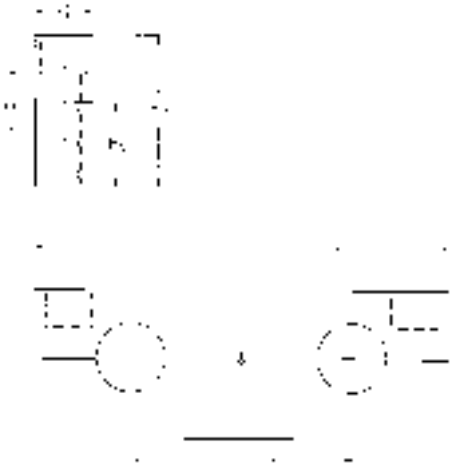

LEAS .. B low shaft position

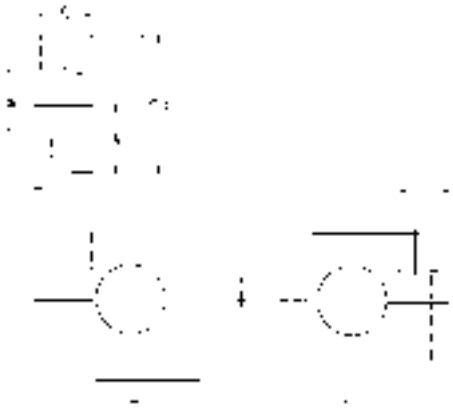

Designations	Dimensions for types A and B				for type A		for type B	
	d_a	A	L	L_1	H_A ±0,015	H_{1A}	H_B ±0,015	H_{1B}
	mm				N			
LEAS 8	8	12	65	32	12,5	23	11	22
LEAS 12	12	15	85	42	18	32	14	28
LEAS 16	16	18	100	54	20	37	17	34
LEAS 20	20	20	130	72	25	46	21	42
LEAS 25	25	25	160	88	30	56	26	52
LEAS 30	30	25	180	96	35	64	29	58
LEAS 40	40	30	230	122	44	80	36	72
LEAS 50	50	30	280	152	52	96	44	88

Example:
LEAS 50 A
LEAS 30 B

2 Linear guides
Shaft guidings – standard series, open types

LBCF ..

Standard series 3
Linear ball bearings, self-aligning, open type
LBCF..A (without seals)
-LS with one seal
-2LS with two seals

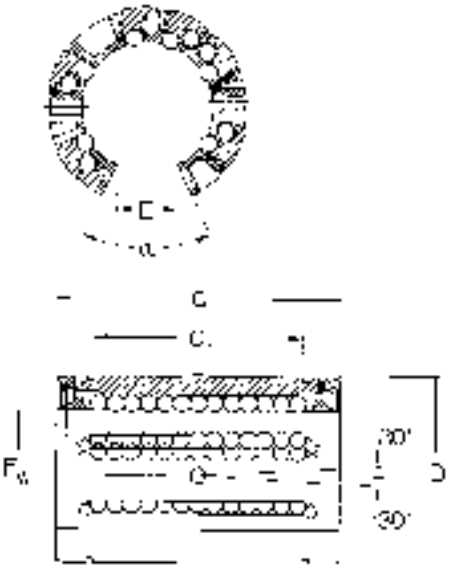

Designations	Dimensions						Basic load ratings dynamic	static
	F_w	D	C	C_3	E	α	C	C_0
	mm					deg.	N	
LBCF 12 A	12	22	32	20	7,6	78	1 080	815
LBCF 16 A	16	26	36	22	10,4	78	1 320	865
LBCF 20 A	20	32	45	28	10,8	60	2 000	1 370
LBCF 25 A	25	40	58	40	13,2	60	2 900	2 040
LBCF 30 A	30	47	68	48	14,2	50	4 650	3 250
LBCF 40 A	40	62	80	56	18,7	50	7 800	5 200
LBCF 50 A	50	75	100	72	23,6	50	11 200	6 950

Example:
LBCF40 A
LBCF 25 A-LS
LBCF 16 A-2LS

LBCT ..

Standard series 3
Linear ball bearings, open type
LBCT.. A (without seals)
-LS with one seal
-2LS with two seals

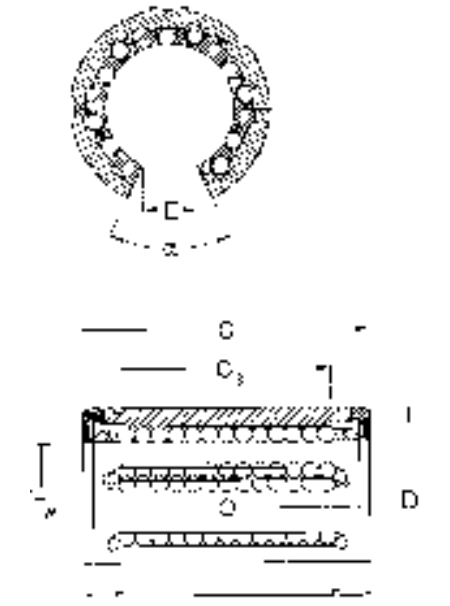

Designations	Dimensions						Basic load ratings dynamic	static
	F_w	D	C	C_3	E	α	C	C_0
	mm					deg.	N	
LBCT 12 A	12	22	32	20	7,6	78	1 160	980
LBCT 16 A	16	26	36	22	10,4	78	1 500	1 290
LBCT 20 A	20	32	45	28	10,8	60	2 240	2 040
LBCT 25 A	25	40	58	40	13,2	60	3 350	3 350
LBCT 30 A	30	47	68	48	14,2	50	5 600	5 700
LBCT 40 A	40	62	80	56	18,7	50	9 000	8 150
LBCT 50 A	50	75	100	72	23,6	50	13 400	12 220
LBCT 60 A	60	90	125	95	29,6	54	20 400	18 000
LBCT 80 A	80	120	165	125	38,4	54	37 500	32 000

Example:
LBCT 20 A
LBCT 80 A-LS
LBCT 50 A-2LS

N.B.:
All LBC.. A and LBH .. A Linear ball bearings available in corrosion resistant!

LBHT ..

Standard series 3
Heavy-load linear ball bearings, open type
LBHT.. A (without seals)
-LS with one seal
-2LS with two seals

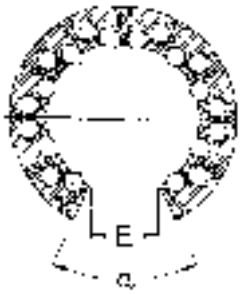

Designations	Dimensions						Basic load ratings dynamic	static
	F_w	D	C	C_3	E	α	C	C_0
	mm					deg.	N	
LBHT 20 A	20	32	45	28	10,8	60	2 650	2 650
LBHT 25 A	25	40	58	40	13,2	60	4 900	5 100
LBHT 30 A	30	47	68	48	14,2	50	7 200	8 000
LBHT 40 A	40	62	80	56	18,7	50	11 600	11 400
LBHT 50 A	50	75	100	72	23,6	50	17 300	17 000

Example:
LBHT 40 A
LBHT 25 A-LS
LBHT 20 A-2LS

LPAT ..

Linear plain bearings, without seals, open design

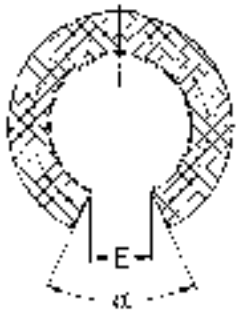

Designations	Dimensions						Basic load ratings dynamic		static
	F_w	D	C	C_3	E	α	C 0,1 m/s	C 4 m/s	C_0
	mm						N		
LPAT 12	12	22	32	20	7,6	78	965	24	3 350
LPAT 16	16	26	36	22	10,4	78	1 530	38	5 400
LPAT 20	20	32	45	28	10,8	60	2 400	60	8 300
LPAT 25	25	40	58	40	13,2	60	4 000	100	14 000
LPAT 30	30	47	68	48	14,2	50	5 500	137	19 300
LPAT 40	40	62	80	56	18,7	50	8 000	200	28 000
LPAT 50	50	75	100	72	23,6	50	12 000	300	41 500
LPAT 60	60	90	125	95	29,6	54	16 600	415	60 000
LPAT 80	80	120	165	125	38,4	54	29 000	720	100 000

N.B.:
All LBC.. A and LBH .. A Linear ball bearings available in corrosion resistant!

2 Linear guides

Shaft guidings – standard series, open types

LUCF ..

Single units, self-aligning, clearance adjustable, open type, relubricatable
LUCF (without seals)
-2LS with two seals

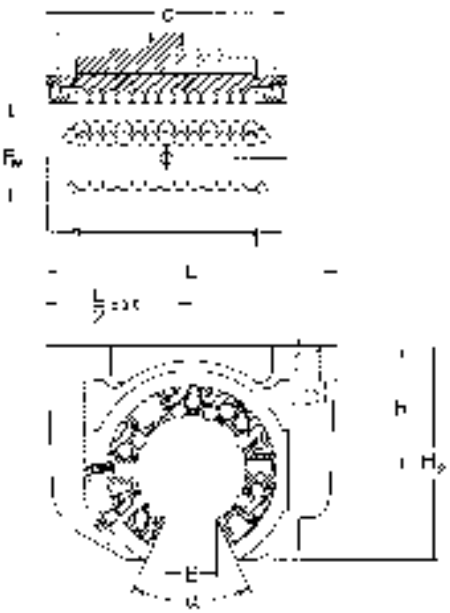

Designations	Dimensions							Basic load ratings dynamic	static
	F_w	C	H ±0,01	H_2	L	E	α	C	C_0
	mm						deg.	N	
LUCF 12	12	32	18	28	52	7,6	78	1 080	815
LUCF 16	16	36	22	35	56	10,4	78	1 320	865
LUCF 20	20	45	25	42	70	10,8	60	2 000	1 370
LUCF 25	25	58	30	51	80	13,2	60	2 900	2 040
LUCF 30	30	68	35	60	88	14,2	50	4 650	3 250
LUCF 40	40	80	45	77	108	18,7	50	7 800	5 200
LUCF 50	50	100	50	88	135	23,6	50	11 200	6 950

Example:
LUCF 16
LUCF 30-2LS

LUCT ..

Single units, clearance adjustable, open type, relubricatable
LUCT (without seals)
-2LS with two seals

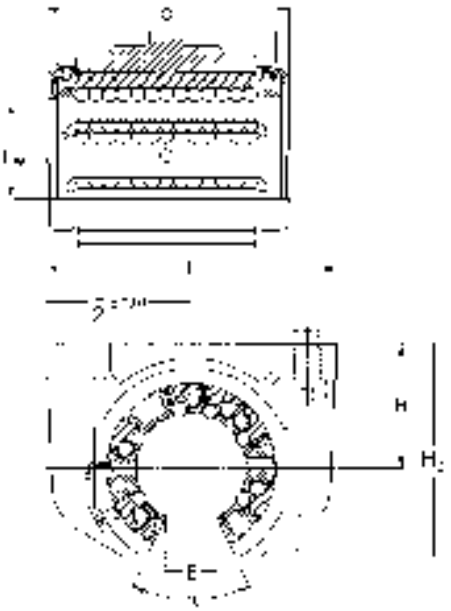

Designations	Dimensions							Basic load ratings dynamic	static
	F_w	C	H ±0,01	H_2	L	E	α	C	C_0
	mm						deg.	N	
LUCT 12	12	32	18	28	52	7,6	78	1 160	980
LUCT 16	16	36	22	35	56	10,4	78	1 500	1 290
LUCT 20	20	45	25	42	70	10,8	60	2 240	2 040
LUCT 25	25	58	30	51	80	13,2	60	3 350	3 350
LUCT 30	30	68	35	60	88	14,2	50	5 600	5 700
LUCT 40	40	80	45	77	108	18,7	50	9 000	8 150
LUCT 50	50	100	50	88	135	23,6	50	13 400	12 220
LUCT 60	60	125	60	105	160	29,6	54	20 400	18 000
LUCT 80	80	165	80	140	205	38,4	54	37 500	32 000

Example:
LUCT 60
LUCT 80-2LS

LUCT .. BH

Single heavy load units, clearance adjustable, open type, relubricatable
LUCT.. BH (without seals)
-2LS with two seals

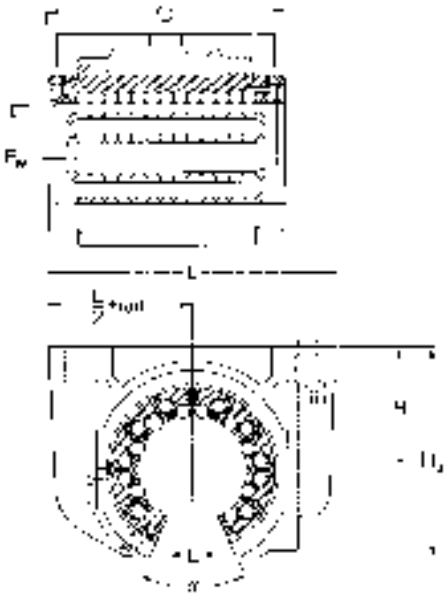

Designations	Dimensions							Basic load ratings dynamic	static
	F_w	C	H ±0,01	H_2	L	E	α	C	C_0
	mm						deg.	N	
LUCT 20 BH	20	45	25	42	70	10,8	60	2 650	2 650
LUCT 25 BH	25	58	30	51	80	13,2	60	4 900	5 100
LUCT 30 BH	30	68	35	60	88	14,2	50	7 200	8 000
LUCT 40 BH	40	80	45	77	108	18,7	50	11 600	11 400
LUCT 50 BH	50	100	50	88	135	23,6	50	17 300	17 000

Example:
LUCT BH 30
LUCT BH 20-2LS

LUCT .. PA

Single units without seals, open type

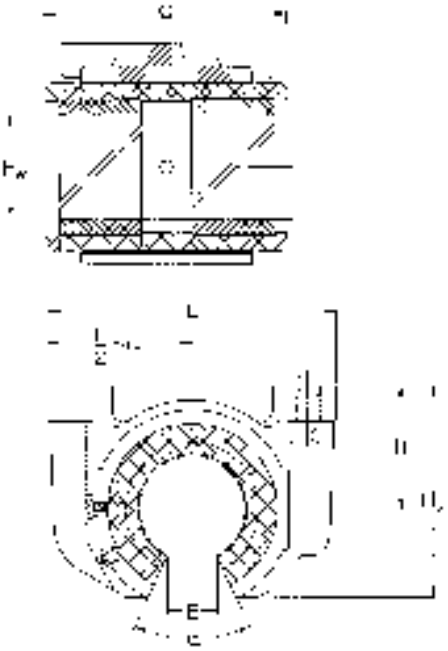

Designations	Dimensions							Basic load ratings dynamic		static
	F_w	C	H	H_2	L	E	α	C 0,1 m/s	C 4 m/s	C_0
	mm						deg.	N		
LUCT 12 PA	12	32	18	28	52	7,6	78	965	24	3 350
LUCT 16 PA	16	36	22	35	56	10,4	78	1 530	38	5 400
LUCT 20 PA	20	45	25	42	70	10,8	60	2 400	60	8 300
LUCT 25 PA	25	58	30	51	80	13,2	60	4 000	100	14 000
LUCT 30 PA	30	68	35	60	88	14,2	50	5 500	137	19 300
LUCT 40 PA	40	80	45	77	108	18,7	50	8 000	200	28 000
LUCT 50 PA	50	100	50	88	135	23,6	50	12 000	300	41 500
LUCT 60 PA	60	125	60	105	160	29,6	54	16 600	415	60 000
LUCT 80 PA	80	165	80	140	205	38,4	54	29 000	720	100 000

2 Linear guides
Shaft guidings – standard series, open types

LUNF ..

Single units, self-aligning, clearance adjustable, open type, relubricatable
LUNF (without seals)
-2LS with two seals

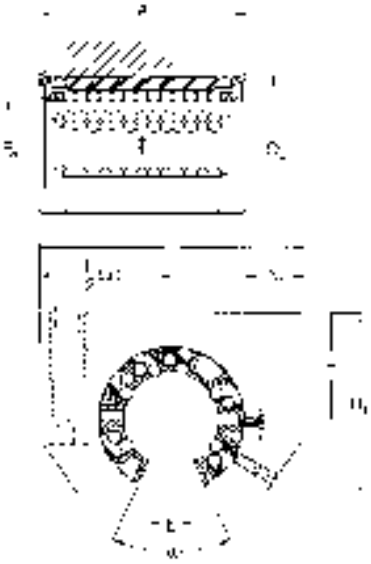

Designations	Dimensions							Basic load ratings dynamic	static
	F_w	A	H ±0,01	H_1	L	E	α	C	C_0
	mm						deg.	N	
LUNF 12	12	32	18	28	43	7,6	78	1 080	815
LUNF 16	16	37	22	35	53	10,4	78	1 320	865
LUNF 20	20	45	25	42	60	10,8	60	2 000	1 370
LUNF 25	25	58	30	51	78	13,2	60	2 900	2 040
LUNF 30	30	68	35	60	87	14,2	50	4 650	3 250
LUNF 40	40	80	45	77	108	18,7	50	7 800	5 200
LUNF 50	50	100	50	88	132	23,6	50	11 200	6 950

Example:
LUNF 20
LUNF 16-2LS

LTCF ..

Tandem units, self-aligning, open type, relubricatable
LTCF (without seals)
-2LS with two seals

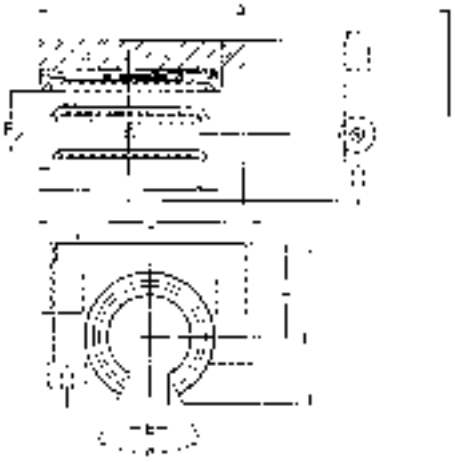

Designations	Dimensions							Basic load ratings dynamic	static
	F_w	A	H ±0,01	H_1	L	E	α	C	C_0
	mm						deg.	N	
LTCF 12	12	76	18	29	42	7,6	78	1 760	1 630
LTCF 16	16	84	22	35	50	10,4	78	2 160	1 730
LTCF 20	20	104	25	42	60	10,8	60	3 200	2 750
LTCF 25	25	130	30	51	74	13,2	60	4 750	4 150
LTCF 30	30	152	35	60	84	14,2	50	7 500	6 550
LTCF 40	40	176	45	77	108	18,7	50	12 700	10 400
LTCF 50	50	224	50	88	130	23,6	50	18 300	14 000

Example:
LTCF 50
LTCF 12-2LS

LTCT ..

Tandem units, open type, relubricatable
LTCT (without seals)
-2LS with two seals

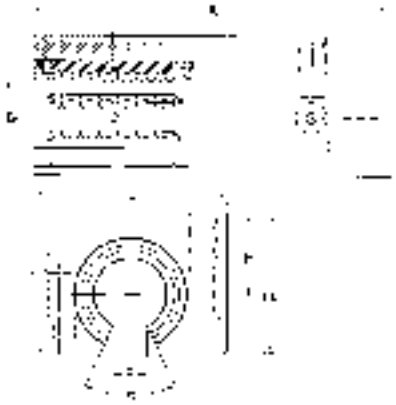

Designations	Dimensions							Basic load ratings dynamic	static
	F_w	A	H	H_1	L	E	α	C	C_0
	mm						deg.	N	
LTCT 12	12	76	18	29	42	7,6	78	1 900	1 960
LTCT 16	16	84	22	35	50	10,4	78	2 450	2 600
LTCT 20	20	104	25	42	60	10,8	60	3 650	4 150
LTCT 25	25	130	30	51	74	13,2	60	5 500	6 700
LTCT 30	30	152	35	60	84	14,2	50	9 150	11 400
LTCT 40	40	176	45	77	108	18,7	50	15 000	16 300
LTCT 50	50	224	50	88	130	23,6	50	22 000	24 500

Example:
LTCT 16
LTCT 30-2LS

LQCF ..

Quadro units, self-aligning, open type, relubricatable
LQCF (without seals)
-2LS with four seals

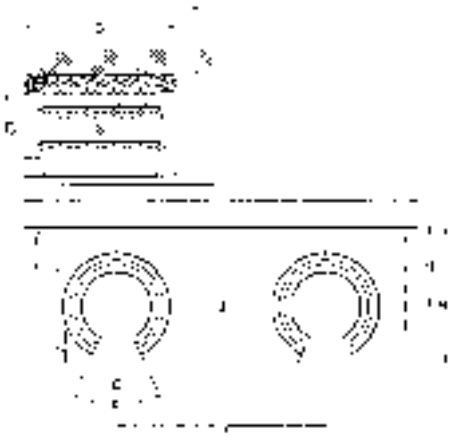

Designations	Dimensions								Basic load ratings dynamic	static
	F_w	C	H ±0,01	H_1	L	L_1	E	α	C	C_0
	mm							deg.	N	
LQCF 12	12	32	18	30	85	42	7,6	78	2 850	3 250
LQCF 16	16	36	22	35	100	54	10,4	78	3 450	3 450
LQCF 20	20	45	25	42	130	72	10,8	60	5 200	5 500
LQCF 25	25	58	30	51	160	88	13,2	60	7 650	8 150
LQCF 30	30	68	35	60	180	96	14,2	50	12 200	12 900
LQCF 40	40	80	45	77	230	122	18,7	50	20 800	20 800

Example:
LQCF 12
LQCF 40-2LS

2 Linear guides

Shaft guidings – standard series, open types

LQCT ..

Quadro units, open type, relubricatable
LQCT (without seals)
-2LS with four seals

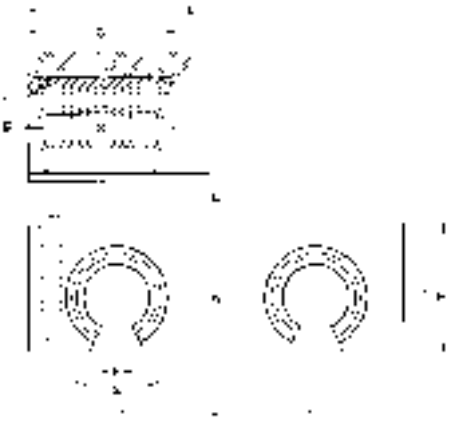

Designations	Dimensions								Basic load ratings dynamic	static
	F_w	C	H ±0,01	H_1	L	L_1	E	α	C	C_0
	mm							deg.	N	
LQCT 12	12	32	18	30	85	42	7,6	78	3 100	4 000
LQCT 16	16	36	22	35	100	54	10,4	78	4 000	5 200
LQCT 20	20	45	25	42	130	72	10,8	60	6 000	8 300
LQCT 25	25	58	30	51	160	88	13,2	60	9 000	13 400
LQCT 30	30	68	35	60	180	96	14,2	50	15 000	22 800
LQCT 40	40	80	45	77	230	122	18,7	50	24 000	33 500
LQCT 50	50	100	55	93	280	152	23,6	50	35 500	49 000

Example:
LQCT 42
LQCT 16-2LS

LRCB ../LRCC ..

Shaft supports
LRCB with bore holes
LRCC without bore holes

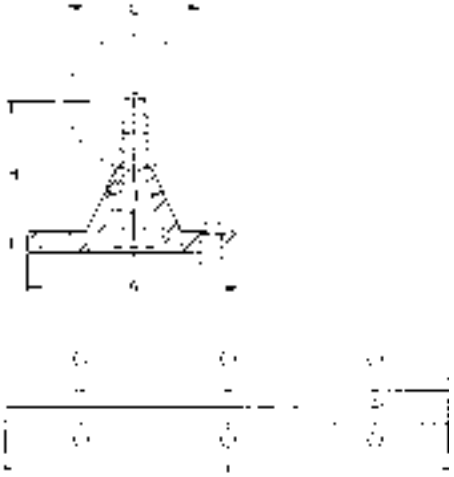

Designations		Dimensions d	A	H ±0,02	L
		mm			
LRCB 12	**LRCC 12**	12	40	22	600
LRCB 16	**LRCC 16**	16	45	26	600
LRCB 20	**LRCC 20**	20	52	32	600
LRCB 25	**LRCC 25**	25	57	36	600
LRCB 30	**LRCC 30**	30	69	42	600
LRCB 40	**LRCC 40**	40	73	50	600
LRCB 50	**LRCC 50**	50	84	60	600
LRCB 60	**LRCC 60**	60	94	68	600
LRCB 80	**LRCC 80**	80	116	86	600

Example:
LRCB 80
LRCC 80

Precision shafts

SKF precision shafts (**fig. 8**) can be supplied either as solid or hollow shafts.
The solid shafts are available in all dimensions required to fit SKF linear ball bearings; the hollow shafts have a minimum outside diameter of 16 mm.

They are induction hardened and ground (**see table on next page**). SKF shafts have exceptionally high dimensional stability and long service life.

Yet at the end of shafts of normal production length, deviations of hardness and dimensional stability can occur.

For special applications, solid shafts of stainless steel or hard chromium plated shafts having a chromium layer approximately 10 µm thick can be supplied. When using stainless steel shafts, please note that the surface is not as hard as that of shafts made of high-grade steel. The case depth may also be greater than indicated in **table 5** and this may have an influence on the machinability of the shafts.

Because of the benefits they offer, SKF precision shafts are not only used in combination with SKF linear ball bearings for linear guides, but also for other purposes, for instance axles or column sleeves.

Tolerances

SKF precision steel shafts are available as standard with a diameter machined to tolerance h6 or h7. Other tolerances are available on request. Shafts cut to special lengths have a length tolerance to DIN 7168 “medium”. The relevant values are given in **table 4**.

Shafts with radial holes

For linear guides requiring support, shafts with threaded radial holes are needed. These can be supplied by SKF. The radial holes can be positioned either in a way that they accommodate SKF shaft supports or as specified in the customer drawing.

Fig. 8

Table 4

Nominal length		Deviation
over	incl.	
mm		
–	120	±0,3
120	400	±0,5
400	1 000	±0,8
1 000	2 000	±1,2
2 000	4 000	±2
4 000	8 000	±3

Length tolerances for shafts to DIN/ISO 2768 medium class

Table 5

Shaft diameter		Hardness depth
over	incl.	min.
mm		
-	10	0,5
10	18	0,8
18	30	1,2
30	50	1,5
50	80	2,2
80	100	3

Case hardening of SKF shafts

N.B.:
In addition to this catalogue, all product brochures are available on **www.skf.com** *as PDF files.*

Publication nr. 4182 EN

Composite shafts

Composite shafts can be supplied to customer drawings, either with screwed joints or with "plug and socket" joints, depending on the application.

Accurately centred trunnions and sockets guarantee smooth transitions at the butt joint. To ensure correct assembly, the relative positions of the shaft sections and of the shaft ends are marked. Composite shafts should be fastened to a support at the butt joints, particularly when these are of the "plug and socket" type. The radial holes should be positioned as closely to the joint as possible and the shaft length selected in a way that bending of the shaft will not result in a gap forming at the joint.

Materials

SKF precision steel shafts are available as shown in **tables 6** and **7**.

SKF precision shafts are made from the non-alloyed high-grade steels Cf53 (Material No.1.1213), Ck53 (Material No.1.1210), Ck60 (Material No.1.1221) and 100Cr6 (Material No.12067).

The surface hardness is between approximately 60 and 64 HRC. The solid shafts of stainless steel are made from the steel X90CrMoV18 (Material No.1.4112) or X46Cr13 (Material No.1.4034). In this case the surface hardness lies between approximately 52 and 56 HRC.

Shafts made from other materials can be supplied to special order.

Table 6

Designation	Type
LJM	Precision shaft, steel Ck53/Cf53, 60-64HRC, h6
LJMH	Hard chromium plated precision shaft, steel Ck53/Cf53, min. 60HRC, h7
LJMR	Precision shaft, corrosion resistant, X90CrMoV18, 52-56HRC, h6/h7
LJMS	Precision shaft, corrosion resistant, X46Cr13, 52-56HRC, h6/h7
LJT	Hollow shaft, high-grade steel, Ck60 or 100Cr6, 60-66HRC, h6/h7

Table 7

Standard length of the shafts[1] Shaft diameter	Dimensions Maximal length[2]				
	LJM[3]	LJMH[3]	LJMS[3]	LJMR[3]	LJT[3]
mm					
3[4]				200	
4[4]				200	
5	3 900	2 000	1 000	3 800	
6	3 900	3 900	3 900	3 800	
8	3 900	3 900	3 900	3 800	
10	6 200	6 200	3 900	3 800	
12	6 200	6 200	4 900	6 200	6 200
14	6 200	6 200	4 900	6 200	6 200
16	6 200	6 200	4 900	6 200	6 200
20	6 200	6 200	4 900	6 200	6 200
25	6 200	6 200	4 900	6 200	6 200
30	6 200	6 200	4 900	6 200	6 200
40	6 200	6 200	4 900	6 200	6 200
50	6 200	6 200	4 900	6 200	6 200
60	6 200	6 200	4 900	6 200	6 200
80	6 200	6 200		6 200	6 200

[1] Different diameters and length on request
[2] Length tolerance ±10 % (based on maximum shaft length)
[3] For details see page 51/52
[4] Only available as ESSC 2

Standard shaft lengths

Ordering key

LJ						/	

Type

Designation type:

Precision shaft, steel Ck53/Cf53, 60-64HRC, h6	M
Hard chromium plated precision shaft, steel Ck53/Cf53, min. 60HRC, h7	MH
Precision shaft, corrosion resistant X90CrMoV18, 52-56HRC, h6/h7	MR
Precision shaft, corrosion resistant, X46Cr13, 52-56HRC, h6/h7	MS
Hollow shaft, high-grade steel, Ck60 or 100Cr6, 60-66HRC, h6/h7	T

Nominal diameter ∅ (mm):
See table 7, page 46

Length (mm):
See table 7, page 46

End finishing:
ESSC (1-10), see pages 48-50

For ESSC 4 - 5: Front side axial thread × depth
For ESSC 6 - 9: Distance between end face and first radial thread

For ESSC 5: Front side axial thread × depth
For ESSC 6 - 9: Distance between the radial threads

Example 1:	LJ	MR	40	1200	ESSC1			
Example 2:	LJ	MR	40	1200	ESSC2			
Example 3:	LJ	MR	40	1200	ESSC3			
Example 4:	LJ	MR	40	1200	ESSC4	M14×40		
Example 5:	LJ	MR	40	1200	ESSC5	M14×40	/	M16×50
Example 6:	LJ	MR	40	1200	ESSC6			
Example 7:	LJ	MR	40	1200	ESSC7	125	/	250
Example 8:	LJ	MR	40	1200	ESSC8			
Example 9:	LJ	MR	40	1200	ESSC9	125	/	250
Example 10:	LJ	MR	40	1200	ESSC10			

2 Linear guides
Precision shafts

ESSC 1

Cut, without chamfer, only deburred
Length tolerance according to ISO 2768 medium class

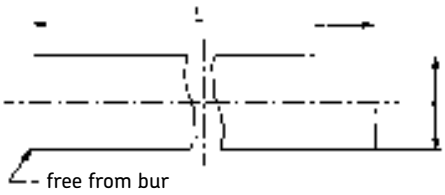

ESSC 2

Cut, with chamfer
Length tolerance as ESSC 1

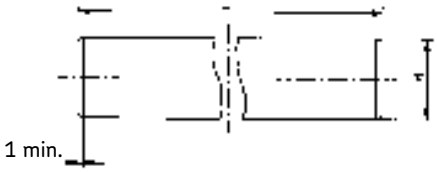

ESSC 3

Cut, 25° machined chamfer, end faces cut at right angles for limited length tolerance or chamfered according to customer specification
Length tolerance +/– 0,1 mm to a total length of 3 000 mm

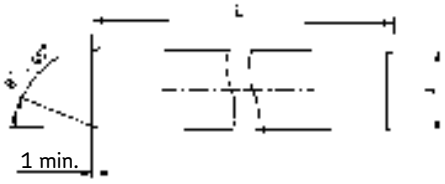

ESSC 4

Cut, 25° machined chamfer, end faces cut at right angles, one front-side (axial) hole
Length tolerance as ESSC 3
(**table 8**)

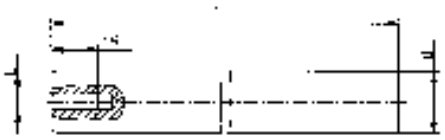

Table 8

Diameter ∅	**Thread** G	**Depth** L_5
mm		mm
5		
8	M4	10
10	M4	10
12	M5	12,5
14	M5	12,5
16	M6	15
20	M8	20
25	M10	25
30	M10	25
40	M12	30
50	M16	40
60	M20	50
80	M24	60

ESSC 5

As ESSC 4 with two front side (axial) holes (**table 9**)

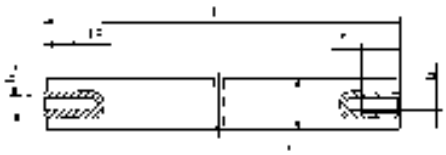

Table 9

Diameter ∅	Thread G	Depth L_5
mm		mm
5		
8	M4	10
10	M4	10
12	M5	12,5
14	M5	12,5
16	M6	15
20	M8	20
25	M10	25
30	M10	25
40	M12	30
50	M16	40
60	M20	50
80	M24	60

ESSC 6

Cut and chamfered as ESSC 2
- with radial holes for LRCB
- first radial hole at Jx = J/2
- H1 according to hardening depth

(**table 10**)

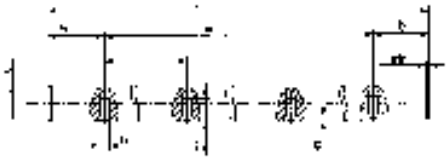

Table 10

∅	Thread	G	G_1	J	J_x
mm		mm			
5	–	–	–	–	–
8	–	–	–	–	–
12	M4	5	8	75	37,5
16	M5	6	9,5	100	50
20	M6	7	13	100	50
25	M8	9	14	120	60
30	M10	11	18	150	75
40	M10	11	20	200	100
50	M12	13	23	200	100
60	M14	15	28	300	150
80	M16	16	33	300	150

ESSC 7

As ESSC6
- radial holes with J and Jx according to customer specification

(**table 11**)

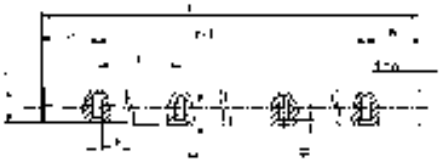

Table 11

∅	Thread	G	G_1	J	J_x
mm		mm			
5	–	–	–	–	–
8	–	–	–	–	–
12	M4	5	8	–	–
16	M5	6	9,5	–	–
20	M6	7	13	–	–
25	M8	9	14	–	–
30	M10	11	18	–	–
40	M10	11	20	–	–
50	M12	13	23	–	–
60	M14	15	28	–	–
80	M16	16	33	–	–

2 Linear guides
Precision shafts

ESSC 8

Cut and chamfer as ESSC 2
- shaft mounted on LRCB
- first radial hole with Jx = J/2
- H1 according to hardness depth

(**table 12**)

Table 12

Ø	Thread	G	G_1	J	J_x
mm		mm			
5	–	–	–	–	–
8	–	–	–	–	–
12	M4	5	8	75	37,5
16	M5	6	9,5	100	50
20	M6	7	13	100	50
25	M8	9	14	120	60
30	M10	11	18	150	75
40	M10	11	20	200	100
50	M12	13	23	200	100
60	M14	15	28	300	150
80	M16	16	33	300	150

ESSC 9

As ESSC8
- shaft mounted on LRCC
- radial holes with J and Jx according to customer specification

(**table 13**)

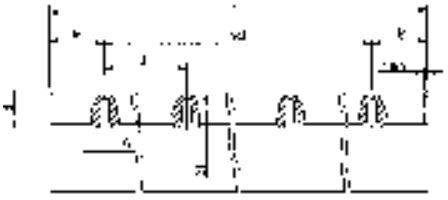

Table 13

Ø	Thread	G	G_1	J	J_x
mm		mm			
5	–	–	–	–	–
8	–	–	–	–	–
12	M4	5	8	–	–
16	M5	6	9,5	–	–
20	M6	7	13	–	–
25	M8	9	14	–	–
30	M10	11	18	–	–
40	M10	11	20	–	–
50	M12	13	23	–	–
60	M14	15	28	–	–
80	M16	16	33	–	–

ESSC 10

Shaft according to customer specification
- manufacture only according to customer drawing

Standard designs for fixed length without chamfer

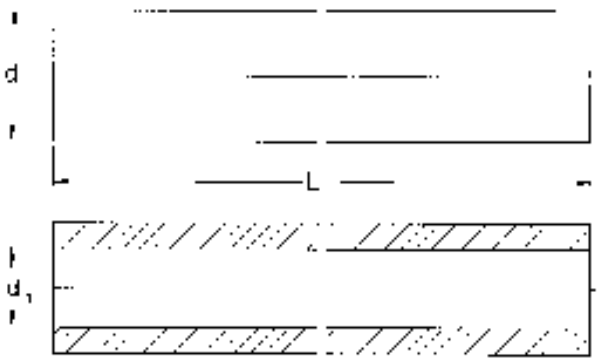

Standard designs for fixed length with chamfer

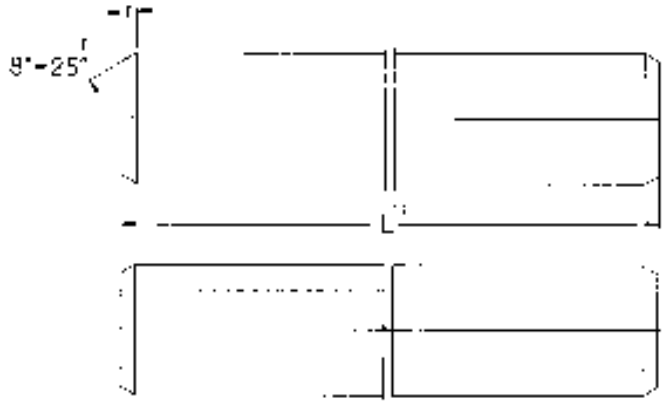

[1] **Shafts cut to special length with chamfered ends.** The length tolerance of these shafts corresponds to LJM 20×1 500 ESSC2 medium class.
The designation for a shaft with 20 mm diameter cut to a length of 1,5 m is, for example, LJM 20×1 500 ESSC2.

Basic data for the various models for the precision shafts

Dimensions			Mass		Moment of inertia		Cross sectional area		Designations				
			Solid shaft	Hollow shaft	Solid shaft	Hollow shaft	Solid shaft	Hollow shaft	Solid shaft of precision steel	Solid shaft of stainless steel		Solid shafts with high grade steel hard chromium plated	Hollow shaft high grade steel
d	d_1	r_{min}							Cf53/Ck53	X90CrMoV18	X46Cr13	Cf53/Ck53	Ck60/100Cr6
mm			kg/m		cm^4		mm^2						
3	–	0,4	0,06	–	0,0004	–	7,1	–	–	LJMR 3	–	–	–
4	–	0,4	0,1	–	0,0013	–	12,6	–	–	LJMR 4	–	–	–
5	–	0,8	0,15	–	0,0031	–	19,6	–	LJM 5	LJMR 5	LJMS 5	LJMH 5	–
6	–	0,8	0,22	–	0,0064	–	28,3	–	LJM 6	LJMR 6	LJMS 6	LJMH 6	–
8	–	0,8	0,39	–	0,02	–	50,3	–	LJM 8	LJMR 8	LJMS 8	LJMH 8	–
10	–	0,8	0,62	–	0,049	–	78,5	–	LJM 10	LJMR 10	LJMS 10	LJMH 10	–
12	4	1	0,89	0,79	0,102	–	113	–	LJM 12	LJMR 12	LJMS 12	LJMH 12	LJT 12
14	–	1	1,21	–	0,189	–	154	–	LJM 14	LJMR 14	LJMS 14	LJMH 14	–
16	7	1	1,58	1,28	0,322	0,31	201	163	LJM 16	LJMR 16	LJMS 16	LJMH 16	LJT 16
20	14	1,5	2,47	1,25	0,785	0,597	314	160	LJM 20	LJMR 20	LJMS 20	LJMH 20	LJT 20
25	16	1,5	3,86	2,35	1,92	1,64	491	305	LJM 25	LJMR 25	LJMS 25	LJMH 25	LJT 25
30	18	1,5	5,55	3,5	3,98	3,46	707	453	LJM 30	LJMR 30	LJMS 30	LJMH 30	LJT 30
40	28	2	9,86	4,99	12,6	9,96	1 260	685	LJM 40	LJMR 40	LJMS 40	LJMH 40	LJT 40
50	30	2	15,4	9,91	30,7	27,7	1 960	1 350	LJM 50	LJMR 50	LJMS 50	LJMH 50	LJT 50
60	36	2,5	22,2	14,2	63,6	57,1	2 830	1 920	LJM 60	LJMR 60	LJMS 60	LJMH 60	LJT 60
80	57	2,5	39,5	19,43	201	153	5 030	2 565	LJM 80	–	–	LJMH 80	LJT 80

Attention:
d_1 can deviate from the value quoted.
Different shaft diameters and types on request.
The static load capacity has to be decreased by 8 % and the dynamic load capacity by 18 % when using the non-rusting types (HV6) in conjunction with precision steel shafts made of stainless steel.

2 Linear guides
Precision shafts

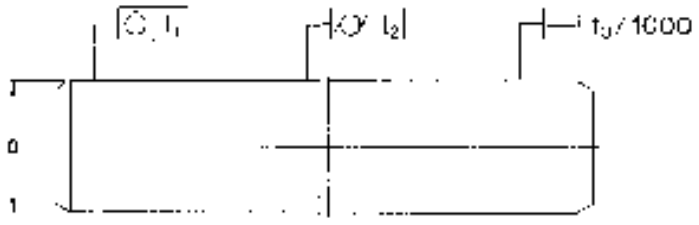

Basic data for the various models for the precision shafts of high-grade steel

Shaft	**Accuracy of dimension and form**									
	Shafts to tolerance h6					**Shafts to tolerance h7**				
Nominal diameter	Diameter deviation		Roundness	Circularity	Straightness[1)]	Diameter deviation		Roundness	Circularity	Straightness[1)]
d	high	low	t_1	t_2	t_3	high	low	t_1	t_2	t_3
mm	µm									
3	0	–6	3	4	150	0	–10	4	6	150
4	0	–8	4	5	150	0	–12	5	8	150
5	0	–8	4	5	150	0	–12	5	8	150
6	0	–8	4	5	150	0	–12	5	8	150
8	0	–9	4	6	120	0	–15	6	9	120
10	0	–9	5	7	120	0	–15	7	10	120
12	0	–11	5	8	100	0	–18	8	11	100
14	0	–11	5	8	100	0	–18	8	11	100
16	0	–11	5	8	100	0	–18	8	11	100
20	0	–13	6	9	100	0	–21	9	13	100
25	0	–13	6	9	100	0	–21	9	13	100
30	0	–13	6	9	100	0	–21	9	13	100
40	0	–16	7	11	100	0	–25	11	16	100
50	0	–16	7	11	100	0	–25	11	16	100
60	0	–19	8	13	100	0	–30	13	19	100
80	0	–19	8	13	100	0	–30	13	19	100

[1)] Shafts with straightness 50 mm/1000 mm to order.

Linear ball bearing table without drive

LZBU quadro-linear tables (**fig. 9**)
The closed LZBU quadro linear table consists of a closed quadro linear bearing unit, two tandem shaft blocks and two shafts of the required length.

The bearing unit is fitted with four LBCD-LS self-aligning linear ball bearings, each sealed at one end. The LZBU-"A" design enables axial movement of the linear bearing unit, i.e. the shafts are fixed to the machine bed via LEAS-"A" shaft blocks. The LZBU-"B" design is provided with LEAS-"B" shaft blocks. This combination enables the shafts to travel with the shaft blocks in applications where the linear bearing unit is fixed. LZBU quadro linear tables can be supplied in sizes ranging from 8 to 50 mm. Size 8 tables are not self-aligning and are not designed for relubrication.

The description of the closed quadro-linear table also applies to the combination of series 1 LQBR..2LS quadro linear bearing units with twin LEBS tandem shaft blocks and shafts (on special request only). Shaft diameters range from 12 to 50 mm.

LZAU quadro-linear tables
The open LZAU quadro linear table comprises the open quadro-linear unit and two high precision shafts with shaft supports. The bearing unit is fitted with four LBCF-"A-LS" self-aligning linear ball bearings, each sealed on one end. The length of these tables is dictated by the distance between centres of the attachment holes in the LRCB shaft supports. The total length should always be a multiple of this distance. LZAU are available in sizes ranging from 12 to 50 mm.

Fig. 9

2

N.B.:
In addition to this catalogue, all product brochures are available on **www.skf.com** *as PDF files.*

Publication nr. 4182 EN

2 Linear guides

Linear ball bearing table without drive

Ordering key

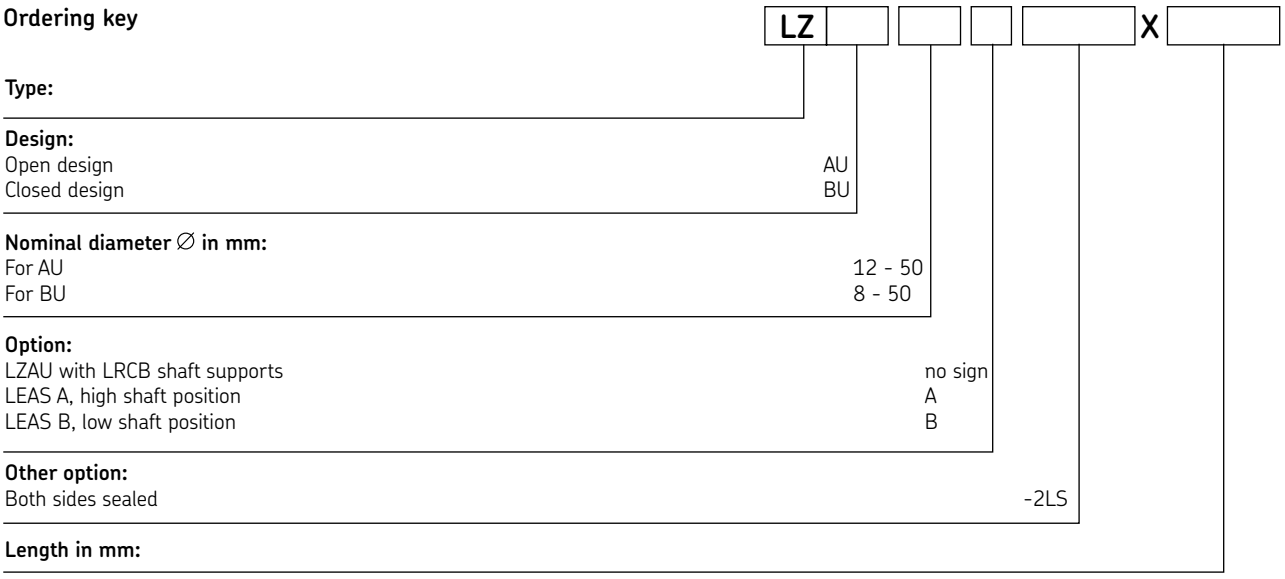

Example: L Z BU 40 B -2LS X 1500

LZBU .. A-2LS

Quadro linear tables, LZBU version with LQCD closed bearing units, LEAS-A* shaft blocks and shafts

* "A" design means fixed shafts and moving unit

Design LZBU ... A with closed linear bearing unit

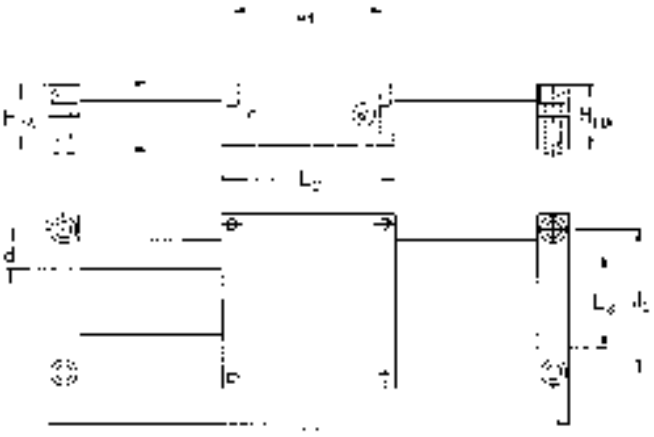

Designations[1]	Dimensions								Load ratings[3] dynamic	static
	d	H_{RA} ±0,03	H_{1A}	L_1[2]	L_2	L_3	J_1	J_2	C	C_0
	mm								N	
LZBU 8 A-2LS[4]	8	24	23	600	65	32	55	52	1 290	1 420
LZBU 12 A-2LS	12	34	32	900	85	42	73	70	2 850	3 250
LZBU 16 A-2LS	16	38	37	1 500	100	54	88	82	3 450	3 450
LZBU 20 A-2LS	20	48	46	1 800	130	72	115	108	5 200	5 500
LZBU 25 A-2LS	25	58	56	1 800	160	88	140	132	7 650	8 150
LZBU 30 A-2LS	30	67	64	2 400	180	96	158	150	12 200	12 900
LZBU 40 A-2LS	40	84	80	3 000	230	122	202	190	20 800	20 800
LZBU 50 A-2LS	50	100	96	3 000	280	152	250	240	30 000	28 000

[1] The designation for an LZBU quadro-linear table with a shaft length of, for instance, 1 200 mm LZBU ...-2LS×1 200. Delivered as a kit of parts.
[2] Recommended maximal shaft length. On demand longer shaft lengths are available. The appropiate length tolerances of these shafts are according to DIN 7168 coarse series.
[3] Valid only for even loading of all four LBC... A linear ball bearings. On delivery the deviation of the shaft must be considered and possibly the load rating revised.
[4] Units fitted with LBCR linear ball bearings are not designed for relubrication and are not self-aligning.

2 Linear guides

Linear ball bearing table without drive

LZBU .. B-2LS

Quadro linear tables, LZBU version with LQCD closed bearing units, LEAS-B* shaft blocks and shafts

* "B" design means fixed unit and moving shafts

Design LZBU ... B with closed linear bearing unit

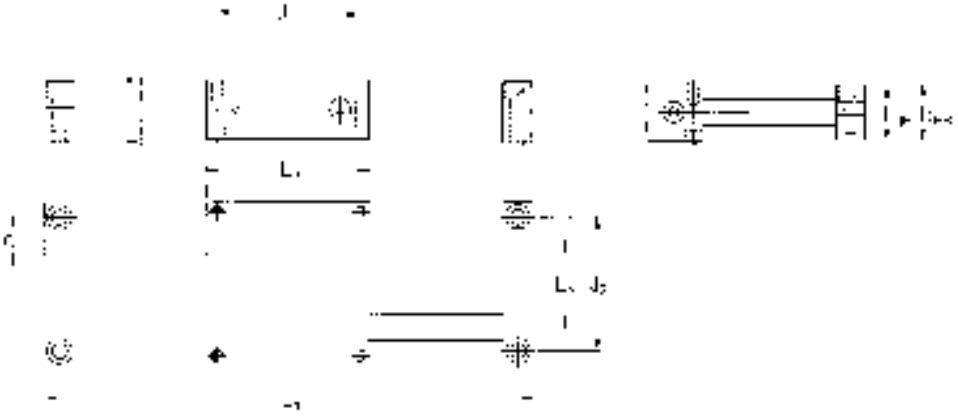

Designations[1]	Dimensions								Load ratings[3] dynamic	static
	d	H_{RB} ± 0,03	H_{1B}	L_1[2]	L_2	L_3	J_1	J_2	C	C_0
	mm								N	
LZBU 8 B-2LS[4]	8	22,5	22	600	65	32	55	52	1 290	1 420
LZBU 12 B-2LS	12	30	28	900	85	42	73	70	2 850	3 250
LZBU 16 B-2LS	16	35	34	1 500	100	54	88	82	3 450	3 450
LZBU 20 B-2LS	20	44	42	1 800	130	72	115	108	5 200	5 200
LZBU 25 B-2LS	25	54	52	1 800	160	88	140	132	7 650	8 150
LZBU 30 B-2LS	30	61	58	2 400	180	96	158	150	12 200	12 900
LZBU 40 B-2LS	40	76	72	3 000	230	122	202	190	20 800	20 800
LZBU 50 B-2LS	50	92	88	3 000	280	152	250	240	30 000	28 000

[1] The designation for an LZBU quadro-linear table with a shaft length of, for instance, 1 200 mm LZBU ...-2LS×1 200. Delivered as a kit of parts.
[2] Recommended maximal shaft length. On demand longer shaft lengths are available. The appropiate length tolerances of these shafts are according to DIN 7168 coarse series.
[3] Valid only for even loading of all four LBC... A linear ball bearings. On delivery the deviation of the shaft must be considered and possibly the load rating revised.
[4] Units fitted with LBCR linear ball bearings are not designed for relubrication and are not self-aligning.

LZAU ..-2LS

Quadro linear tables, LZAU version with LQCF open bearing units and supported shafts

Design LZAU with open linear bearing unit type LQCF

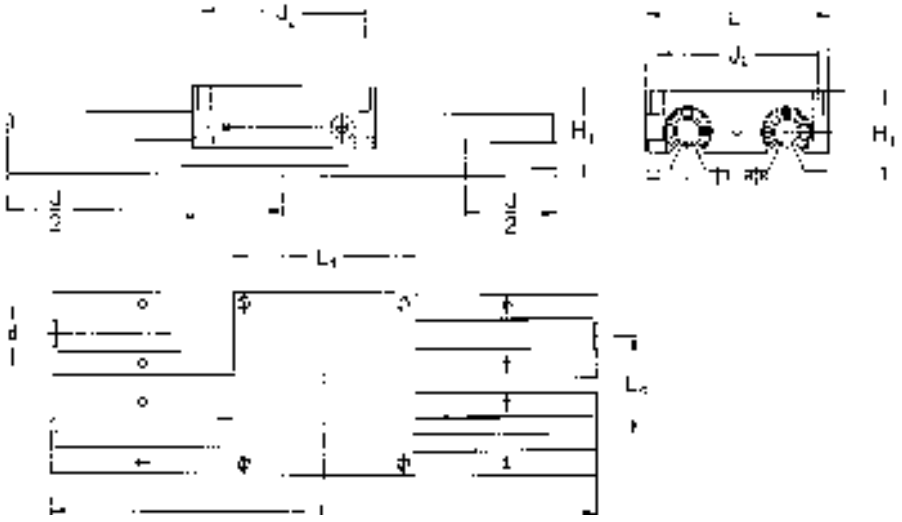

Designations[1]	Dimensions							Load ratings[3] dynamic	static
	d	H_T ± 0,03	J[2]	L	L_1	L_2	J_2	C	C_0
	mm							N	
LZAU 12-2LS	12	40	75	900	85	42	73	2 850	3 250
LZAU 16-2LS	16	48	100	1 500	100	54	88	3 450	3 450
LZAU 20-2LS	20	57	100	1 800	130	72	115	5 200	5 500
LZAU 25-2LS	25	66	120	1 800	160	88	140	7 650	8 150
LZAU 30-2LS	30	77	150	2 400	180	96	158	12 200	1 2900
LZAU 40-2LS	40	95	200	3 000	230	122	202	20 800	20 800
LZAU 50-2LS	50	115	200	3 000	280	152	250	30 000	28 000

[1] The designation for an LZAU quadro-linear table with a shaft length of, for instance, 600 mm LZAU ... –2LS × 600. Delivered with shafts and shaft supports ready assembled.
[2] The separation is always arranged symmetrically to half the table length.
[3] Valid only for even loading of all four LBC... A linear ball bearings.

Dimensions Standard length										
d	L									
mm	Length increments in mm									
12 ÷ 40	300	600	900	1 200	1 500	1 800	2 100	2 400	2 700	3 000
50	–	600	900	1 200	1 500	1 800	2 100	2 400	2 700	3 000

2 Linear guides
Linear ball bearing table without drive

Applications

In response to our customer's ultimate need to produce more with less, SKF has combined its knowledge and experience with the latest technology to develop solutions for your specific conditions. Whether your goal is to design equipment that provides more customer value, or to increase overall profitability, with SKF experience and expertise, you're likely to find a real solution.

Portable tool

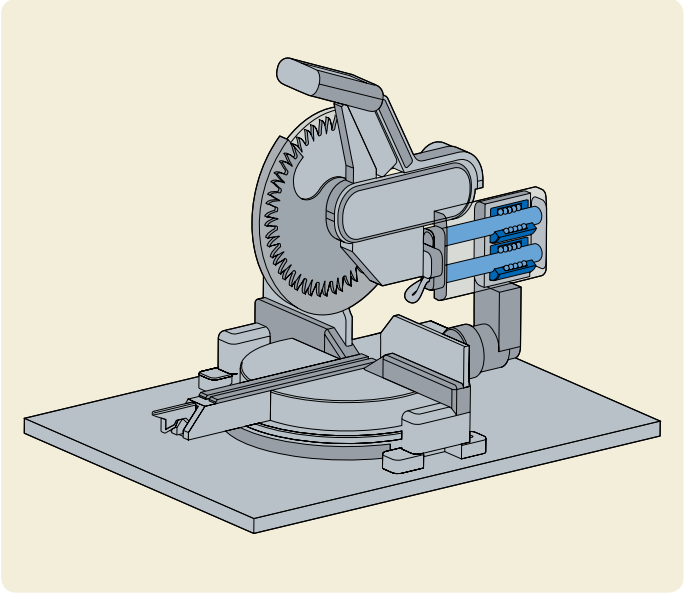

Components application
a) Linear ball bearings
b) Precision shafts

Pneumatic handling

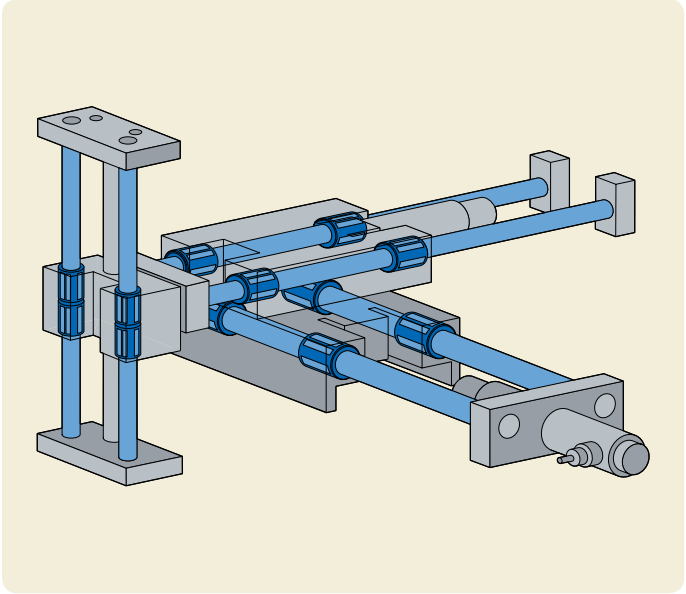

Components application
a) Linear ball bearings
b) Precision shafts

Bread slicing machine

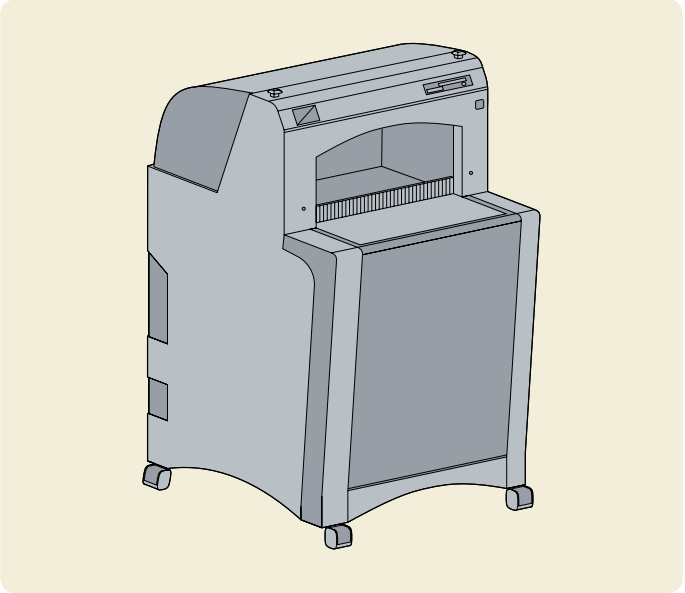

Components application
a) Linear ball bearings

Press brake

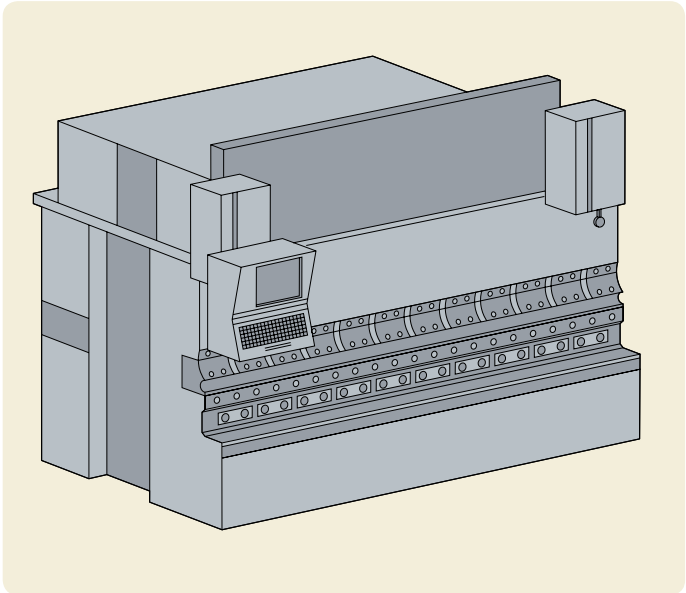

Components application
a) Linear ball bearings
b) Precision shafts
c) Precision ball screws

LLT Profile rail guides

The productivity and economic success of a given application depends, to a large extent, on the quality of the selected linear components. Often, these components determine market acceptance and thus help the manufacturer obtain a competitive edge. The linear components have to be as adaptable as possible to precisely meet the application's requirements, ideally with standard components.

The new SKF profile rail guide series LLT (**fig. 10**) satisfies these market demands: available in a wide range of sizes, carriages and accessories as well as in various preload and accuracy classes, LLT profile rail guides can easily be adapted to individual application demands. In addition, these rail guides can operate at virtually unlimited stroke. This opens up almost any design option.

The range of possible applications includes material handling, plastic injection moulding, woodworking, printing, packaging and medical devices, to name a few. With such applications, the design of the LLT reveals its full capabilities:

SKF manufactures these profile rail guides in an X-arrangement with a 45° contact angle between the rolling elements and raceways. This design provides an equal load carrying capacity in all four main load directions and therefore greater design flexibility since all mounting positions are possible (**fig. 11**). Moreover, deviations in parallelism and height, which usually occur in multi-axis systems, can be compensated for more efficiently, resulting in reliable and smooth operation under a variety of operating conditions.

In addition, SKF offers a miniature profile rail guide series and a series of ready assembled and driven profile rail guide slides. Contact your SKF representative for additional information.

Fig. 10

Fig. 11

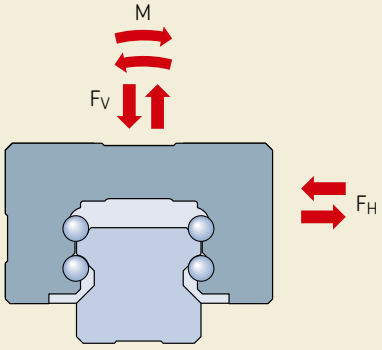

Publication nr. MT/P1 07061/3 EN

N.B.:
In addition to this catalogue, all product brochures are available on **www.skf.com** *as PDF files.*

2 Linear guides
Profile rail guides

Product overview

Fig. 12

LLTHC ... A
Flanged carriage, standard length, standard height.
Further information on **page 62**.

Fig. 13

LLTHC ... R
Slim-line carriage, standard length, extended height.
Further information on **page 66**.

Fig. 14

LLTHC ... U
Slim-line carriage, standard length, standard height.
Further information on **page 70**.

Fig. 15

LLTHR Profile rail with blind holes
Further information on **page 76**.

LLTHR Profile rail with standard holes
Further information on **page 74**.

Fig. 16

LLTHC ... LA
Flanged carriage, extended length, standard height.
Further information on **page 64**.

Fig. 17

LLTHC ... LR
Slim-line carriage, extended length, extended height.
Further information on **page 68**.

Fig. 18

LLTHC ... SU
Slim-line carriage, short length, standard height.
Further information on **page 72**.

Ordering key

LLTH [ ] [ ] [ ] [ ] [ ] [ ] [ ] [ ] [ ] [ ] [ ] [ ] [ ] [ ] [ ]

Type code:

Carriage (carriage only) [1]	C
Rail (rail only)[1]	R
System[2]	S
Accessories, (if order separately)[1]	Z

Carriage Size:

15, 20, 25, 30, 35, 45

Carriage type:

Flanged carriage, standard length, standard height	A
Flanged carriage, extended length, standard height	LA
Slim-line carriage, short length, standard height	SU
Slim-line carriage, standard length, standard height	U
Slim-line carriage, standard length, extended height	R
Slim-line carriage, extended length, extended height	LR

Number of carriages per rail:

1, 2, 4, 6, ...

Preload classes:

Zero preload	T0
Light preload, 2% C	T1
Medium preload, 8% C	T2

Rail length:

80 mm up to maximum rail length (1 mm step)

Precision class:

Standard	P5
Medium	P3
High[3]	P1

Joined rail track (if not selected – no code)**:**

Yes	A

Bellows (if not selected – no code)**:**

Bellows, system complete with bellows	B
Bellow Kit, type 2 (carriage thru the end of the rail)	B2
Bellow Kit, type 4 (between two carriages)	B4

Bellows, definition of number of folds:

Number of folds	xxx
Splitting of sections	/
No bellow in this section	-

Bellows material:

Standard material “PUR”, (temperature resistance +90 °C)	
Special material suitable for laser applications – self fading, (temperature resistance +160 °C)	LAS
Special material suitable for welding applications, (temperature resistance +260 °C)	WEL

Rail:

Rail, if customized according to drawing number	D
Rail with blind holes	D4

Distance between end face and first mounting hole of the rail:

If no “E” specified, the holes at both rail ends will be positioned equidistantly from either end of the rail	E = 0
“E” dimension to be specified, for calculation and minimum “E” dimension, see **page 75**	E = xx

System (Carriage mounted on rail, if not selected – no code)**:**

Yes[4]	M

Sealing

Scraper plate	S1
Seal kit, additional front seal with scraper plate	S3
Additional front seal	S7

[1] When ordered separately (not in a system). [2] System can consist of one rail, one or more carriages and accessories. [3] P1 only available as system

[4] If selected, accessories have to be ordered seperately and will not be mounted. Refer to **page 78** to get more information about the accessories.

2 Linear guides
Profile rail guides

Carriage LLTHC .. A

Flanged carriage, standard length, standard height (**fig. 19**)

Fig. 19

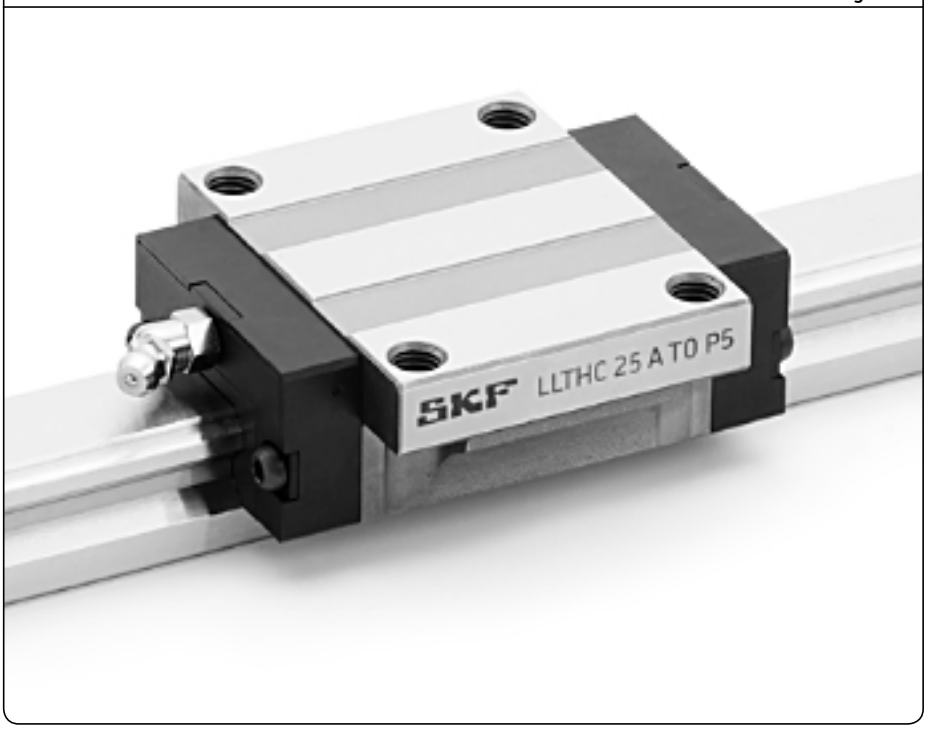

Size[1]	Accuracy class[2]	Designation[3] Preload class		
		T0	T1	T2
–		–		
15	P5	LLTHC 15 A T0 P5	LLTHC 15 A T1 P5	LLTHC 15 A T2 P5
	P3	LLTHC 15 A T0 P3	LLTHC 15 A T1 P3	LLTHC 15 A T2 P3
	▶ P1		LLTHC 15 A T1 P1	LLTHC 15 A T2 P1
20	P5	LLTHC 20 A T0 P5	LLTHC 20 A T1 P5	LLTHC 20 A T2 P5
	P3	LLTHC 20 A T0 P3	LLTHC 20 A T1 P3	LLTHC 20 A T2 P3
	▶ P1		LLTHC 20 A T1 P1	LLTHC 20 A T2 P1
25	P5	LLTHC 25 A T0 P5	LLTHC 25 A T1 P5	LLTHC 25 A T2 P5
	P3	LLTHC 25 A T0 P3	LLTHC 25 A T1 P3	LLTHC 25 A T2 P3
	▶ P1		LLTHC 25 A T1 P1	LLTHC 25 A T2 P1
30	P5	LLTHC 30 A T0 P5	LLTHC 30 A T1 P5	LLTHC 30 A T2 P5
	P3	LLTHC 30 A T0 P3	LLTHC 30 A T1 P3	LLTHC 30 A T2 P3
	▶ P1		LLTHC 30 A T1 P1	LLTHC 30 A T2 P1
35	P5	LLTHC 35 A T0 P5	LLTHC 35 A T1 P5	LLTHC 35 A T2 P5
	P3	LLTHC 35 A T0 P3	LLTHC 35 A T1 P3	LLTHC 35 A T2 P3
	▶ P1		LLTHC 35 A T1 P1	LLTHC 35 A T2 P1
45	P5	LLTHC 45 A T0 P5	LLTHC 45 A T1 P5	LLTHC 45 A T2 P5
	P3	LLTHC 45 A T0 P3	LLTHC 45 A T1 P3	LLTHC 45 A T2 P3
	▶ P1		LLTHC 45 A T1 P1	LLTHC 45 A T2 P1

[1] Front seal appearance can slightly deviate per size.
[2] ▶ P1 only available as system.
[3] ■ Preferred range. For system designation, please refer to designation system on **page 61**.

Carriage LLTHC „ A

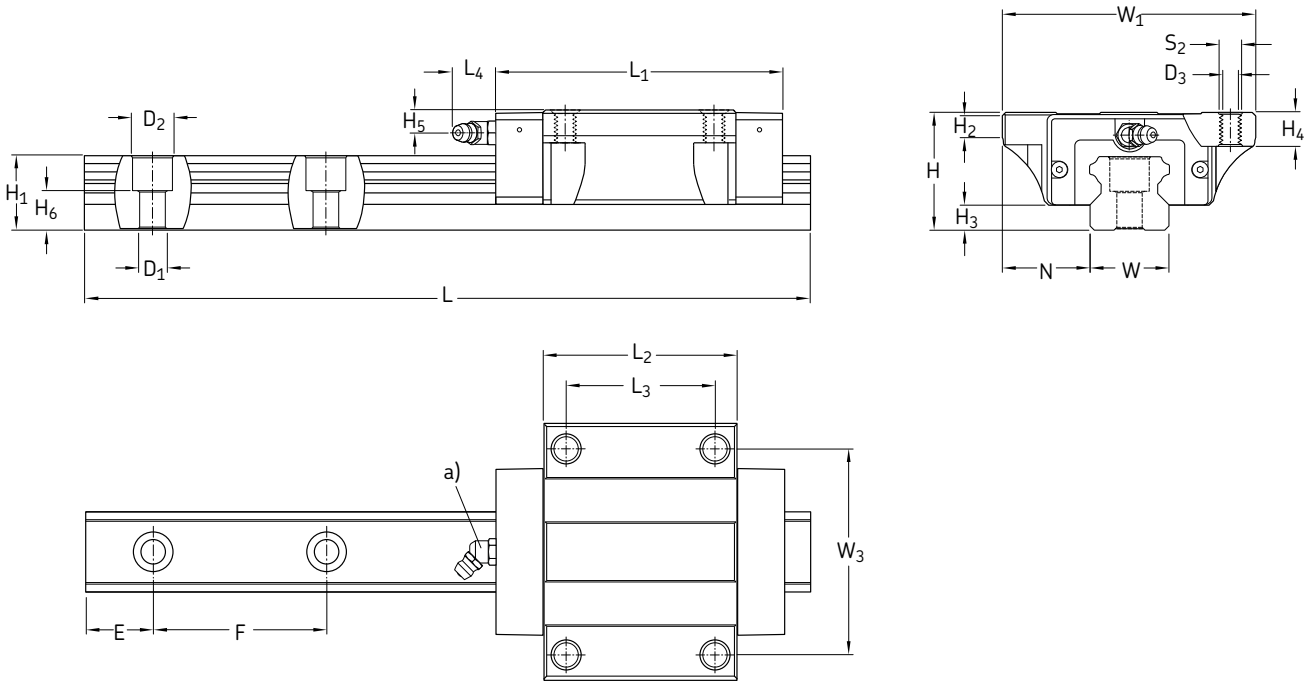

a) For detailed informations on grease nipples, please refer to page 11 of reference catalogue “Profile rail guides LLT” 07061/3 EN.

Size	Assembly dimensions					Carriage dimensions								
	W_1	N	H	**H_2**	H_3	L_1	L_2	L_3	L_4	W_3	H_4	H_5	D_3	S_2
–	mm													-
15	47	16	24	5,9	4,6	62	40	30	4,3	38	8	4,3	4,3	M5
20	63	21,5	30	6,9	5	72	50	40	15	53	9	5,7	5,2	M6
25	70	23,5	36	11	7	82	57	45	16,6	57	12	6,5	6,7	M8
30	90	31	42	9	9	100,4	67,4	52	14,6	72	11,5	8	8,5	M10
35	100	33	48	12,3	9,5	114	77	62	14,6	82	13	8	8,5	M10
45	120	37,5	60	12,3	14	135	96	80	14,6	100	15	8,5	10,4	M12

Size	Rail dimensions									Weight		Load ratings[1]		Moments[1]			
										Carriage	Rail	dynamic	static	dynamic	static	dynamic	static
	W	H_1	H_6	F	D_1	D_2	E_{min} -0,75	E_{max} -0,75	L_{max} -1,5			C	C_0	M_C	M_{C0}	$M_{A/B}$	$M_{A0/B0}$
–	mm									kg	kg/m	N		Nm			
15	15	14	8,5	60	4,5	7,5	10	50	3 920	0,21	1,4	8 400	15 400	56	103	49	90
20	20	18	9,3	60	6	9,5	10	50	3 920	0,4	2,3	12 400	24 550	112	221	90	179
25	23	22	12,3	60	7	11	10	50	3 920	0,57	3,3	18 800	30 700	194	316	155	254
30	28	26	13,8	80	9	14	12	70	3 944	1,1	4,8	26 100	41 900	329	528	256	410
35	34	29	17	80	9	14	12	70	3 944	1,6	6,6	34 700	54 650	535	842	388	611
45	45	38	20,8	105	14	20	16	90	3 917	2,7	11,3	59 200	91 100	1 215	1 869	825	1 270

[1] Dynamic load capacities and moments are based on a travel life of 100 km. Please refer to to publication 07061 for further details.

Carriage LLTHC .. LA

Flanged carriage, extended length, standard height (**fig. 20**)

Fig. 20

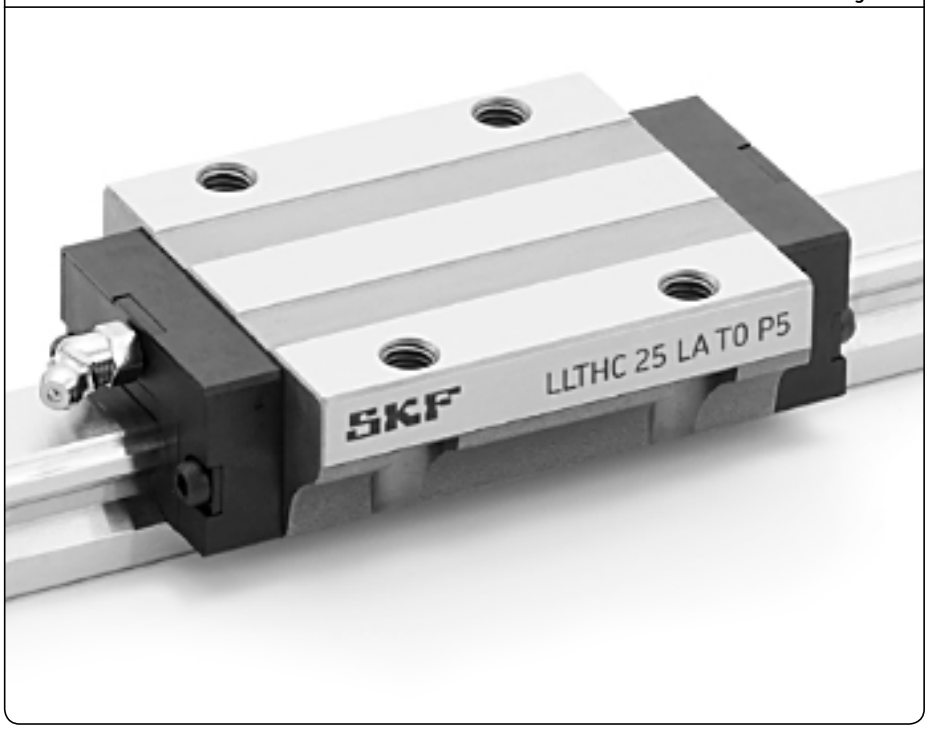

Size[1]	Accuracy class[2]	Designation[3] Preload class		
		T0	T1	T2
–		–		
20	P5	LLTHC 20 LA T0 P5	LLTHC 20 LA T1 P5	LLTHC 20 LA T2 P5
	P3	LLTHC 20 LA T0 P3	LLTHC 20 LA T1 P3	LLTHC 20 LA T2 P3
	▶ P1		LLTHC 20 LA T1 P1	LLTHC 20 LA T2 P1
25	P5	LLTHC 25 LA T0 P5	LLTHC 25 LA T1 P5	LLTHC 25 LA T2 P5
	P3	LLTHC 25 LA T0 P3	LLTHC 25 LA T1 P3	LLTHC 25 LA T2 P3
	▶ P1		LLTHC 25 LA T1 P1	LLTHC 25 LA T2 P1
30	P5	LLTHC 30 LA T0 P5	LLTHC 30 LA T1 P5	LLTHC 30 LA T2 P5
	P3	LLTHC 30 LA T0 P3	LLTHC 30 LA T1 P3	LLTHC 30 LA T2 P3
	▶ P1		LLTHC 30 LA T1 P1	LLTHC 30 LA T2 P1
35	P5	LLTHC 35 LA T0 P5	LLTHC 35 LA T1 P5	LLTHC 35 LA T2 P5
	P3	LLTHC 35 LA T0 P3	LLTHC 35 LA T1 P3	LLTHC 35 LA T2 P3
	▶ P1		LLTHC 35 LA T1 P1	LLTHC 35 LA T2 P1
45	P5	LLTHC 45 LA T0 P5	LLTHC 45 LA T1 P5	LLTHC 45 LA T2 P5
	P3	LLTHC 45 LA T0 P3	LLTHC 45 LA T1 P3	LLTHC 45 LA T2 P3
	▶ P1		LLTHC 45 LA T1 P1	LLTHC 45 LA T2 P1

[1] Front seal appearance can slightly deviate per size.
[2] ▶ P1 only available as system.
[3] ■ Preferred range. For system designation, please refer to designation system on **page 61**.

Carriage LLTHC .. LA

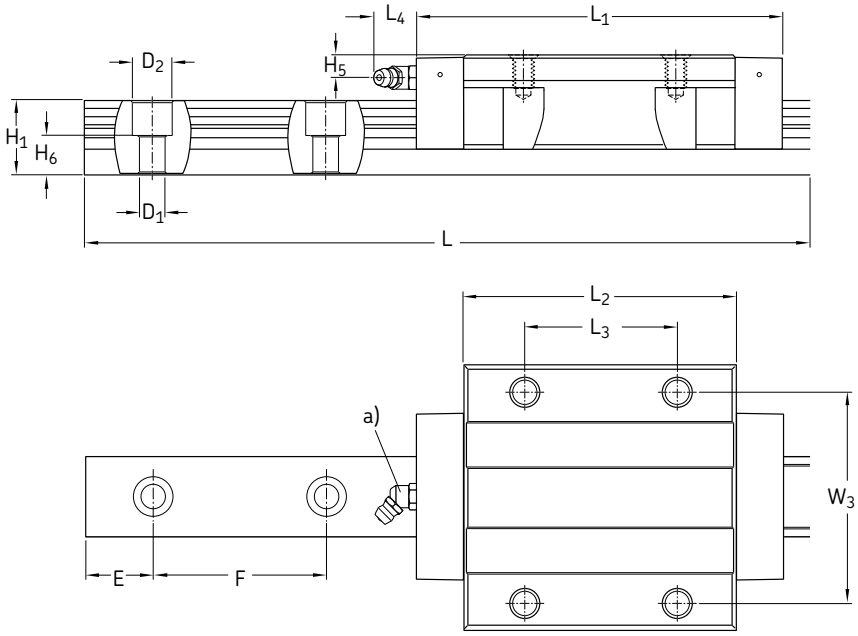

a) For detailed informations on grease nipples, please refer to page 11 of reference catalogue “Profile rail guides LLT” 07061/3 EN.

Size	Assembly dimensions					Carriage dimensions								
	W_1	N	H	**H_2**	H_3	L_1	L_2	L_3	L_4	W_3	H_4	H_5	D_3	S_2
–	mm													-
20	63	21,5	30	6,9	5	88,2	66,2	40	15	53	9	5,7	5,2	M6
25	70	23,5	36	11	7	104,1	79,1	45	16,6	57	12	6,5	6,7	M8
30	90	31	42	9	9	125,4	92,4	52	14,6	72	11,5	8	8,5	M10
35	100	33	48	12,3	9,5	142,5	105,5	62	14,6	82	13	8	8,5	M10
45	120	37,5	60	12,3	14	167	128	80	14,6	100	15	8,5	10,4	M12

Size	Rail dimensions									Weight		Load ratings[1]		Moments[1]			
										Carriage	Rail	dynamic	static	dynamic	static	dynamic	static
	W	H_1	H_6	F	D_1	D_2	E_{min} -0,75	E_{max} -0,75	L_{max} -1,5			C	C_0	M_C	M_{C0}	$M_{A/B}$	$M_{A0/B0}$
–	mm									kg	kg/m	N		Nm			
20	20	18	9,3	60	6	9,5	10	50	3 920	0,52	2,3	15 200	32 700	137	295	150	322
25	23	22	12,3	60	7	11	10	50	3 920	0,72	3,3	24 400	44 600	252	460	287	525
30	28	26	13,8	80	9	14	12	70	3 944	1,4	4,8	33 900	60 800	428	767	466	836
35	34	29	17	80	9	14	12	70	3 944	2	6,6	45 000	79 400	694	1 224	706	1 246
45	45	38	20,8	105	14	20	16	90	3 917	3,6	11,3	72 400	121 400	1 485	2 491	1 376	2 308

[1] Dynamic load capacities and moments are based on a travel life of 100 km. Please refer to to publication 07061 for further details.

Carriage LLTHC .. R

Slim-line carriage, standard length, extended height (**fig. 21**)

Fig. 21

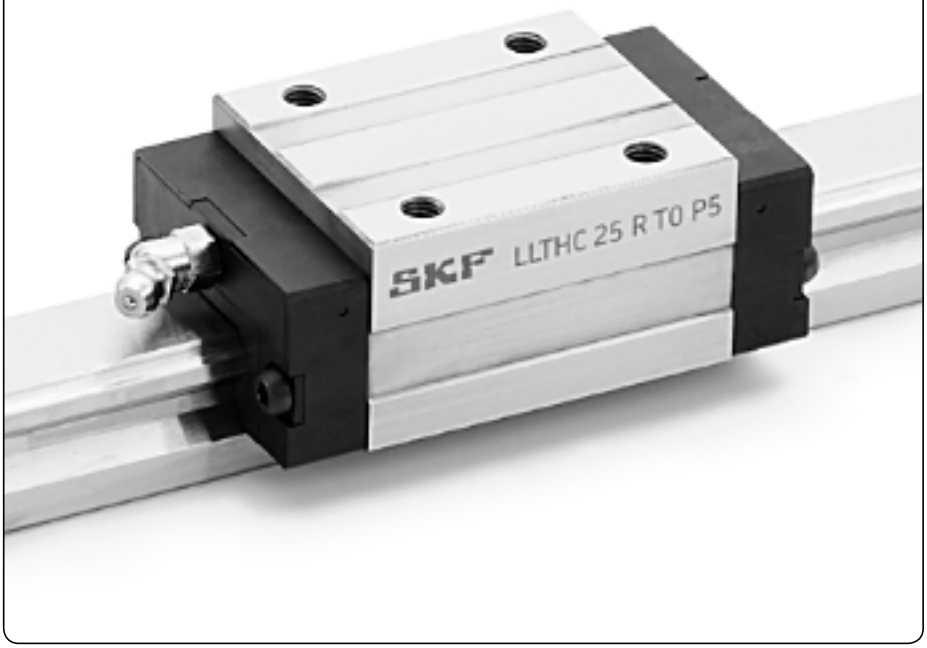

Size[1]	Accuracy class[2]	Designation[3] Preload class		
		T0	T1	T2
–		–		
15	P5	LLTHC 15 R T0 P5	LLTHC 15 R T1 P5	LLTHC 15 R T2 P5
	P3	LLTHC 15 R T0 P3	LLTHC 15 R T1 P3	LLTHC 15 R T2 P3
	▶ P1		LLTHC 15 R T1 P1	LLTHC 15 R T2 P1
25	P5	LLTHC 25 R T0 P5	LLTHC 25 R T1 P5	LLTHC 25 R T2 P5
	P3	LLTHC 25 R T0 P3	LLTHC 25 R T1 P3	LLTHC 25 R T2 P3
	▶ P1		LLTHC 25 R T1 P1	LLTHC 25 R T2 P1
30	P5	LLTHC 30 R T0 P5	LLTHC 30 R T1 P5	LLTHC 30 R T2 P5
	P3	LLTHC 30 R T0 P3	LLTHC 30 R T1 P3	LLTHC 30 R T2 P3
	▶ P1		LLTHC 30 R T1 P1	LLTHC 30 R T2 P1
35	P5	LLTHC 35 R T0 P5	LLTHC 35 R T1 P5	LLTHC 35 R T2 P5
	P3	LLTHC 35 R T0 P3	LLTHC 35 R T1 P3	LLTHC 35 R T2 P3
	▶ P1		LLTHC 35 R T1 P1	LLTHC 35 R T2 P1
45	P5	LLTHC 45 R T0 P5	LLTHC 45 R T1 P5	LLTHC 45 R T2 P5
	P3	LLTHC 45 R T0 P3	LLTHC 45 R T1 P3	LLTHC 45 R T2 P3
	▶ P1		LLTHC 45 R T1 P1	LLTHC 45 R T2 P1

[1] Front seal appearance can slightly deviate per size.
[2] ▶ P1 only available as system.
[3] ■ Preferred range. For system designation, please refer to designation system on **page 61**.

Carriage LLTHC .. R

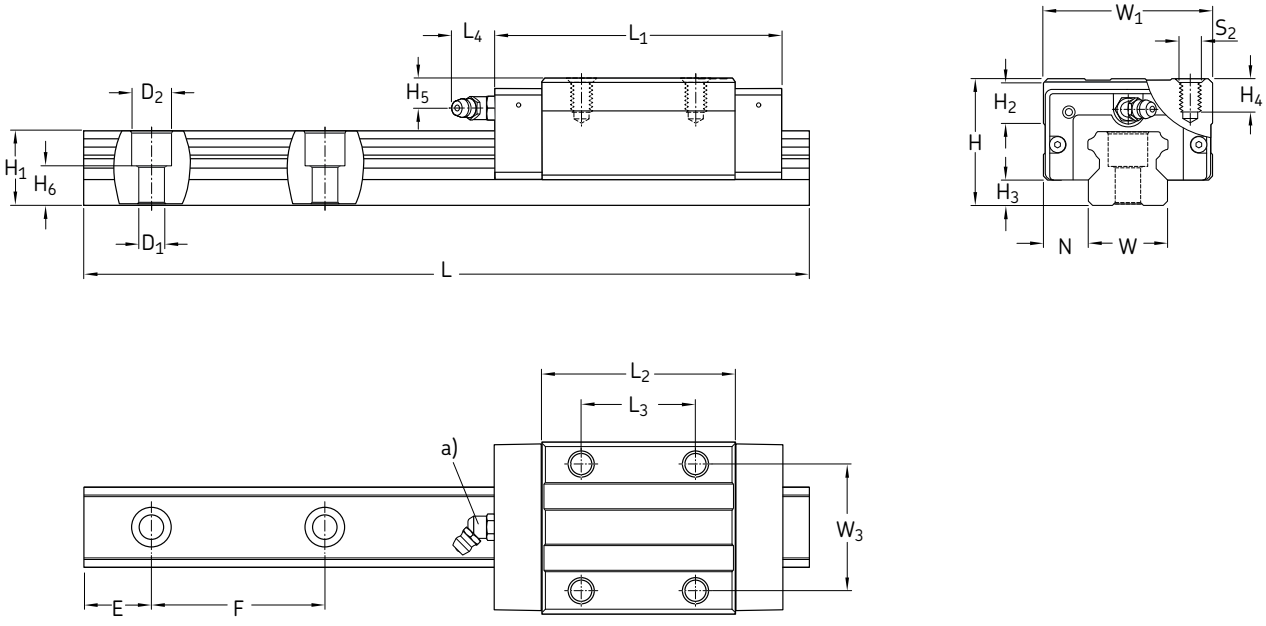

a) For detailed informations on grease nipples, please refer to page 11 of reference catalogue “Profile rail guides LLT” 07061/3 EN.

Size	Assembly dimensions					Carriage dimensions							
	W_1	N	H	**H_2**	H_3	L_1	L_2	L_3	L_4	W_3	H_4	H_5	S_2
–	mm												
15	34	9,5	28	7,8	4,6	62	40	26	15	26	7,5	8,3	M4
25	48	12,5	40	12,2	7	82	57	35	16,6	35	10	10,5	M6
30	60	16	45	14,3	9	100,4	67,4	40	14,6	40	11,2	11	M8
35	70	18	55	18	9,5	114	77	50	14,6	50	17	15	M8
45	86	20,5	70	20,9	14	135	96	60	14,6	60	20,5	18,5	M10

Size	Rail dimensions									Weight		Load ratings[1]		Moments[1]			
										Carriage	Rail	dynamic	static	dynamic	static	dynamic	static
	W	H_1	H_6	F	D_1	D_2	E_{min} -0,75	E_{max} -0,75	L_{max} -1,5			C	C_0	M_C	M_{C0}	$M_{A/B}$	$M_{A0/B0}$
–	mm									kg	kg/m	N		Nm			
15	15	14	8,5	60	4,5	7,5	10	50	3 920	0,19	1,4	8 400	15 400	56	103	49	90
25	23	22	12,3	60	7	11	10	50	3 920	0,45	3,3	18 800	30 700	194	316	155	254
30	28	26	13,8	80	9	14	12	70	3 944	0,91	4,8	26 100	41 900	329	528	256	410
35	34	29	17	80	9	14	12	70	3 944	1,5	6,6	34 700	54 650	535	842	388	611
45	45	38	20,8	105	14	20	16	90	3 917	2,3	11,3	59 200	91 100	1 215	1 869	825	1 270

[1] Dynamic load capacities and moments are based on a travel life of 100 km. Please refer to to publication 07061 for further details.

Carriage LLTHC .. LR

Slim-line carriage, extended length, extended height (**fig. 22**)

Fig. 22

Size[1]	Accuracy class[2]	Designation[3] Preload class		
		T0	T1	T2
–		–		
20	P5	LLTHC 20 LR T0 P5	LLTHC 20 LR T1 P5	LLTHC 20 LR T2 P5
	P3	LLTHC 20 LR T0 P3	LLTHC 20 LR T1 P3	LLTHC 20 LR T2 P3
	▶ P1		LLTHC 20 LR T1 P1	LLTHC 20 LR T2 P1
25	P5	LLTHC 25 LR T0 P5	LLTHC 25 LR T1 P5	LLTHC 25 LR T2 P5
	P3	LLTHC 25 LR T0 P3	LLTHC 25 LR T1 P3	LLTHC 25 LR T2 P3
	▶ P1		LLTHC 25 LR T1 P1	LLTHC 25 LR T2 P1
30	P5	LLTHC 30 LR T0 P5	LLTHC 30 LR T1 P5	LLTHC 30 LR T2 P5
	P3	LLTHC 30 LR T0 P3	LLTHC 30 LR T1 P3	LLTHC 30 LR T2 P3
	▶ P1		LLTHC 30 LR T1 P1	LLTHC 30 LR T2 P1
35	P5	LLTHC 35 LR T0 P5	LLTHC 35 LR T1 P5	LLTHC 35 LR T2 P5
	P3	LLTHC 35 LR T0 P3	LLTHC 35 LR T1 P3	LLTHC 35 LR T2 P3
	▶ P1		LLTHC 35 LR T1 P1	LLTHC 35 LR T2 P1
45	P5	LLTHC 45 LR T0 P5	LLTHC 45 LR T1 P5	LLTHC 45 LR T2 P5
	P3	LLTHC 45 LR T0 P3	LLTHC 45 LR T1 P3	LLTHC 45 LR T2 P3
	▶ P1		LLTHC 45 LR T1 P1	LLTHC 45 LR T2 P1

[1] Front seal appearance can slightly deviate per size.
[2] ▶ P1 only available as system.
[3] ■ Preferred range. For system designation, please refer to designation system on **page 61**.

Carriage LLTHC .. LR

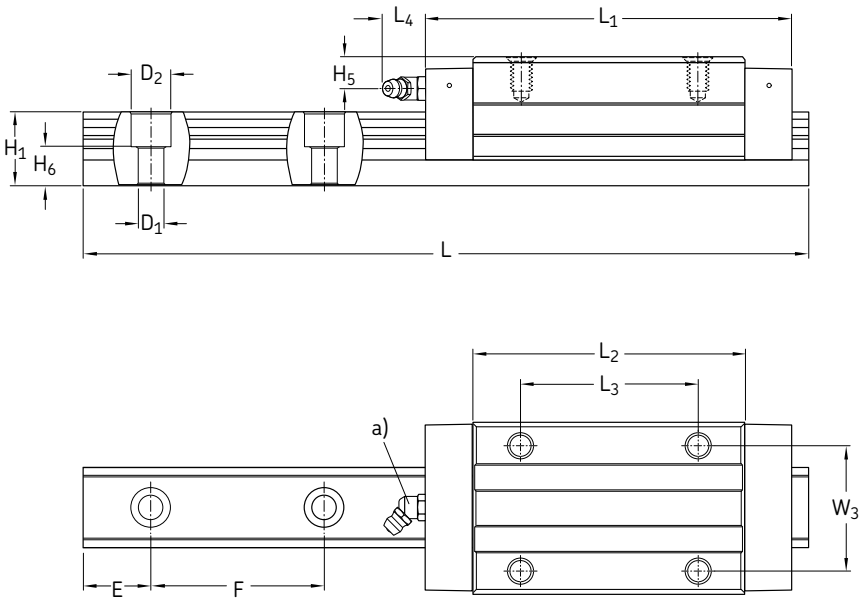

a) For detailed informations on grease nipples, please refer to page 11 of reference catalogue “Profile rail guides LLT” 07061/3 EN.

Size	Assembly dimensions					Carriage dimensions							
	W_1	N	H	**H_2**	H_3	L_1	L_2	L_3	L_4	W_3	H_4	H_5	S_2
–	mm												
20	44	12	30	8,3	5	88,2	66,2	50	15	32	6,5	5,7	M5
25	48	12,5	40	12,2	7	104,1	79,1	50	16,6	35	10	10,5	M6
30	60	16	45	14,3	9	125,4	92,4	60	14,6	40	11,2	11	M8
35	70	18	55	18	9,5	142,5	105,5	72	14,6	50	17	15	M8
45	86	20,5	70	20,9	14	167	128	80	14,6	60	20,5	18,5	M10

Size	Rail dimensions									Weight		Load ratings[1]		Moments[1]			
										Carriage	Rail	dynamic	static	dynamic	static	dynamic	static
	W	H_1	H_6	F	D_1	D_2	E_{min} -0,75	E_{max} -0,75	L_{max} -1,5			C	C_0	M_C	M_{C0}	$M_{A/B}$	$M_{A0/B0}$
–	mm									kg	kg/m	N		Nm			
20	20	18	9,3	60	6	9,5	10	50	3 920	0,47	2,3	15 200	32 700	137	295	150	322
25	23	22	12,3	60	7	11	10	50	3 920	0,56	3,3	24 400	44 600	252	460	287	525
30	28	26	13,8	80	9	14	12	70	3 944	1,2	4,8	33 900	60 800	428	767	466	836
35	34	29	17	80	9	14	12	70	3 944	1,9	6,6	45 000	79 400	694	1 224	706	1 246
45	45	38	20,8	105	14	20	16	90	3 917	2,8	11,3	72 400	121 400	1 485	2 491	1 376	2 308

[1] Dynamic load capacities and moments are based on a travel life of 100 km. Please refer to to publication 07061 for further details.

Carriage LLTHC .. U

Slim-line carriage, standard length, standard height (**fig. 23**)

Fig. 23

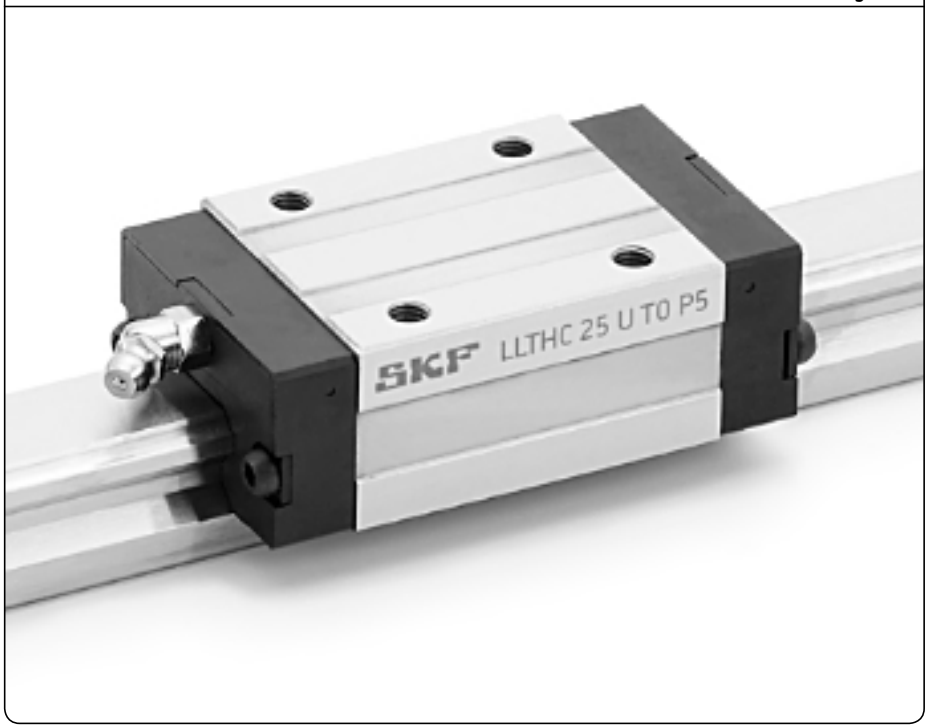

Size[1]	Accuracy class[2]	Designation[3] Preload class		
		T0	T1	T2
–		–		
15	P5	LLTHC 15 U T0 P5	LLTHC 15 U T1 P5	LLTHC 15 U T2 P5
	P3	LLTHC 15 U T0 P3	LLTHC 15 U T1 P3	LLTHC 15 U T2 P3
	▶ P1		LLTHC 15 U T1 P1	LLTHC 15 U T2 P1
20	P5	LLTHC 20 U T0 P5	LLTHC 20 U T1 P5	LLTHC 20 U T2 P5
	P3	LLTHC 20 U T0 P3	LLTHC 20 U T1 P3	LLTHC 20 U T2 P3
	▶ P1		LLTHC 20 U T1 P1	LLTHC 20 U T2 P1
25	P5	LLTHC 25 U T0 P5	LLTHC 25 U T1 P5	LLTHC 25 U T2 P5
	P3	LLTHC 25 U T0 P3	LLTHC 25 U T1 P3	LLTHC 25 U T2 P3
	▶ P1		LLTHC 25 U T1 P1	LLTHC 25 U T2 P1
30	P5	LLTHC 30 U T0 P5	LLTHC 30 U T1 P5	LLTHC 30 U T2 P5
	P3	LLTHC 30 U T0 P3	LLTHC 30 U T1 P3	LLTHC 30 U T2 P3
	▶ P1		LLTHC 30 U T1 P1	LLTHC 30 U T2 P1
35	P5	LLTHC 35 U T0 P5	LLTHC 35 U T1 P5	LLTHC 35 U T2 P5
	P3	LLTHC 35 U T0 P3	LLTHC 35 U T1 P3	LLTHC 35 U T2 P3
	▶ P1		LLTHC 35 U T1 P1	LLTHC 35 U T2 P1
45	P5	LLTHC 45 U T0 P5	LLTHC 45 U T1 P5	LLTHC 45 U T2 P5
	P3	LLTHC 45 U T0 P3	LLTHC 45 U T1 P3	LLTHC 45 U T2 P3
	▶ P1		LLTHC 45 U T1 P1	LLTHC 45 U T2 P1

[1] Front seal appearance can slightly deviate per size.
[2] ▶ P1 only available as system.
[3] ■ Preferred range. For system designation, please refer to designation system on **page 61**.

Carriage LLTHC .. U

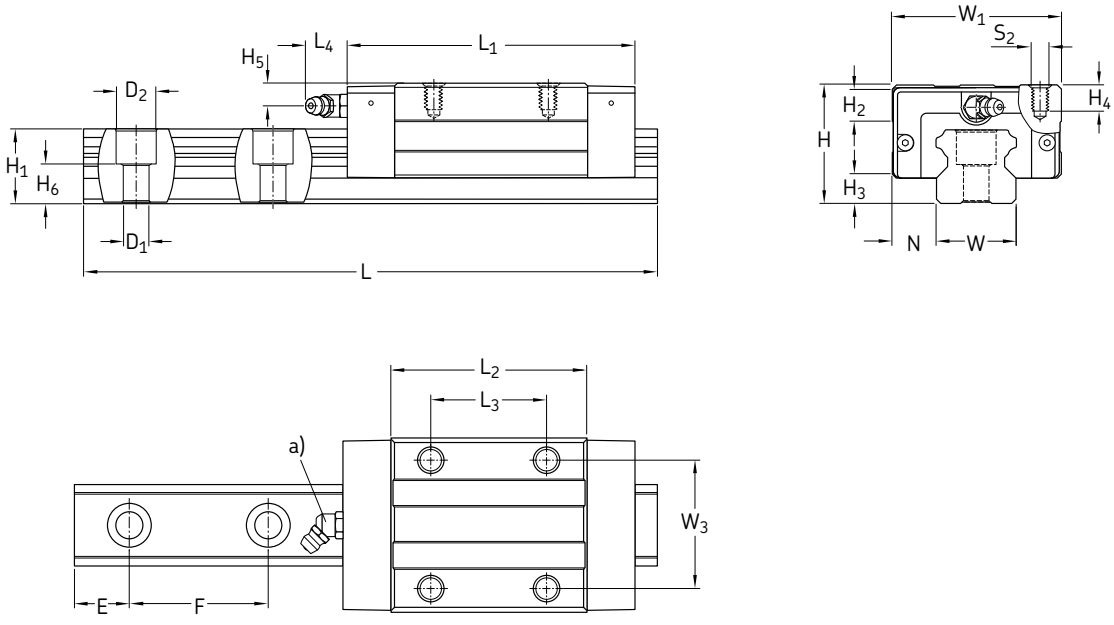

a) For detailed informations on grease nipples, please refer to page 11 of reference catalogue “Profile rail guides LLT” 07061/3 EN.

Size	Assembly dimensions					Carriage dimensions							
	W_1	N	H	**H_2**	H_3	L_1	L_2	L_3	L_4	W_3	H_4	H_5	S_2
–	mm												
15	34	9,5	24	4,2	4,6	62	40	26	4,3	26	3,8	4,3	M4
20	44	12	30	8,3	5	72	50	36	15	32	6,5	5,7	M5
25	48	12,5	36	8,2	7	82	57	35	16,6	35	6,5	6,5	M6
30	60	16	42	11,3	9	100,4	67,4	40	14,6	40	8,5	8	M8
35	70	18	48	11	9,5	114	77	50	14,6	50	10	8	M8
45	86	20,5	60	10,9	14	135	96	60	14,6	60	12	8,5	M10

Size	Rail dimensions									Weight		Load ratings[1]		Moments[1]			
										Carriage	Rail	dynamic	static	dynamic	static	dynamic	static
	W	H_1	H_6	F	D_1	D_2	E_{min} -0,75	E_{max} -0,75	L_{max} -1,5			C	C_0	M_C	M_{C0}	$M_{A/B}$	$M_{A0/B0}$
–	mm									kg	kg/m	N		Nm			
15	15	14	8,5	60	4,5	7,5	10	50	3 920	0,17	1,4	8 400	15 400	56	103	49	90
20	20	18	9,3	60	6	9,5	10	50	3 920	0,26	2,3	12 400	24 550	112	221	90	179
25	23	22	12,3	60	7	11	10	50	3 920	0,38	3,3	18 800	30 700	194	316	155	254
30	28	26	13,8	80	9	14	12	70	3 944	0,81	4,8	26 100	41 900	329	528	256	410
35	34	29	17	80	9	14	12	70	3 944	1,2	6,6	34 700	54 650	535	842	388	611
45	45	38	20,8	105	14	20	16	90	3 917	2,1	11,3	59 200	91 100	1 215	1 869	825	1 270

[1] Dynamic load capacities and moments are based on a travel life of 100 km. Please refer to to publication 07061 for further details.

Carriage LLTHC .. SU

Slim-line carriage, short length, standard height (**fig. 24**)

Fig. 24

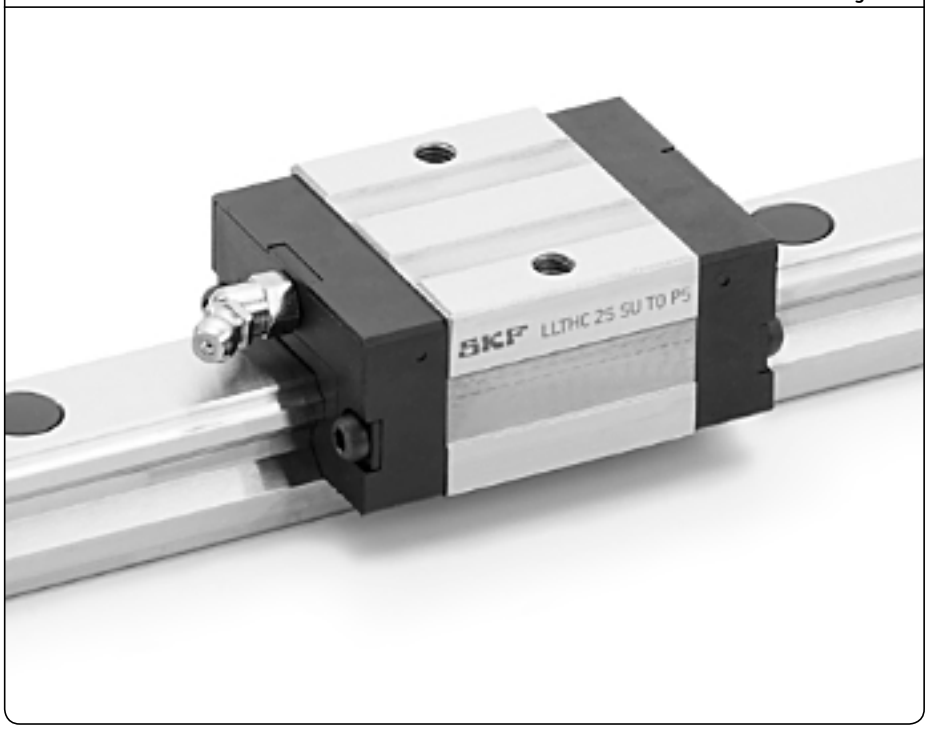

Size[1]	Accuracy class[2]	Designation[3] Preload class	
		T0	T1
–		–	
15	P5	LLTHC 15 SU T0 P5	LLTHC 15 SU T1 P5
	P3	LLTHC 15 SU T0 P3	LLTHC 15 SU T1 P3
	▶ P1		**LLTHC 15 SU T1 P1**
20	P5	LLTHC 20 SU T0 P5	LLTHC 20 SU T1 P5
	P3	LLTHC 20 SU T0 P3	LLTHC 20 SU T1 P3
	▶ P1		**LLTHC 20 SU T1 P1**
25	P5	LLTHC 25 SU T0 P5	LLTHC 25 SU T1 P5
	P3	LLTHC 25 SU T0 P3	LLTHC 25 SU T1 P3
	▶ P1		**LLTHC 25 SU T1 P1**
30	P5	LLTHC 30 SU T0 P5	LLTHC 30 SU T1 P5
	P3	LLTHC 30 SU T0 P3	LLTHC 30 SU T1 P3
	▶ P1		**LLTHC 30 SU T1 P1**
35	P5	LLTHC 35 SU T0 P5	LLTHC 35 SU T1 P5
	P3	LLTHC 35 SU T0 P3	LLTHC 35 SU T1 P3
	▶ P1		**LLTHC 35 SU T1 P1**

[1] Front seal appearance can slightly deviate per size.
[2] ▶ P1 only available as system.
[3] ■ Preferred range. For system designation, please refer to designation system on **page 61**.

Carriage LLTHC .. SU

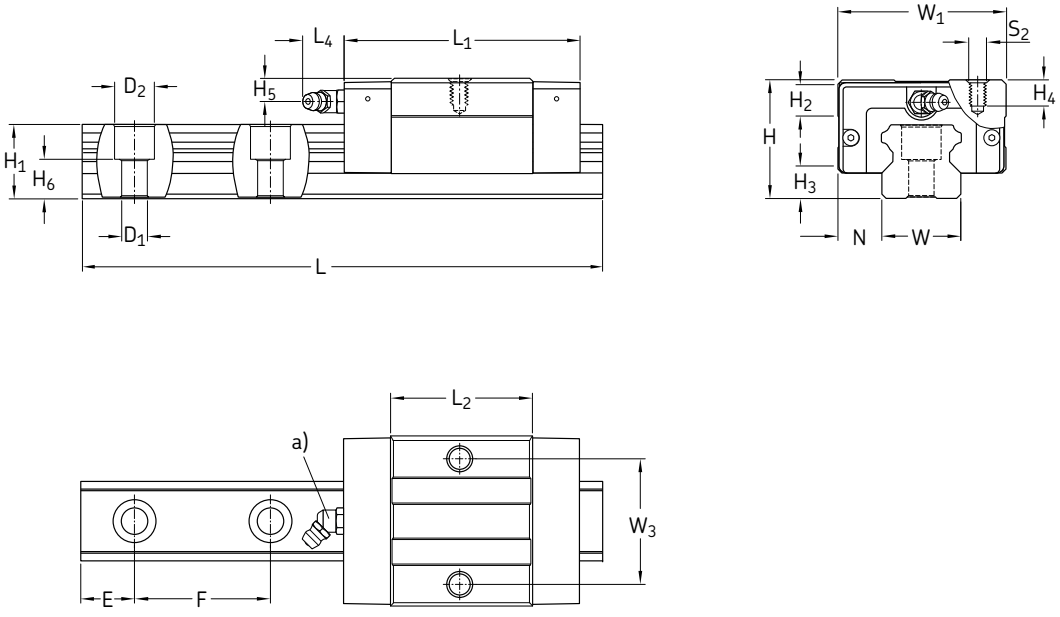

a) For detailed informations on grease nipples, please refer to page 11 of reference catalogue “Profile rail guides LLT” 07061/3 EN.

Size	Assembly dimensions					Carriage dimensions						
	W_1	N	H	**H_2**	H_3	L_1	L_2	L_4	W_3	H_4	H_5	S_2
–	mm											
15	34	9,5	24	4,2	4,6	47,6	25,6	4,3	26	3,8	4,3	M4
20	44	12	30	8,3	5	54,1	32,1	15	32	6,5	5,7	M5
25	48	12,5	36	8,2	7	63,8	38,8	16,6	35	6,5	6,5	M6
30	60	16	42	11,3	9	78	45	14,6	40	8,5	8	M8
35	70	18	48	11	9,5	88,4	51,4	14,6	50	10	8	M8

Size	Rail dimensions									Weight		Load ratings[1]		Moments[1]			
										Carriage	Rail	dynamic	static	dynamic	static	dynamic	static
	W	H_1	H_6	F	D_1	D_2	E_{min} -0,75	E_{max} -0,75	L_{max} -1,5			C	C_0	M_C	M_{C0}	$M_{A/B}$	$M_{A0/B0}$
–	mm									kg	kg/m	N		Nm			
15	15	14	8,5	60	4,5	7,5	10	50	3 920	0,1	1,4	5 800	9 000	39	60	21	32
20	20	18	9,3	60	6	9,5	10	50	3 920	0,17	2,3	9 240	14 400	83	130	41	64
25	23	22	12,3	60	7	11	10	50	3 920	0,21	3,3	13 500	19 600	139	202	73	106
30	28	26	13,8	80	9	14	12	70	3 944	0,48	4,8	19 200	26 600	242	335	120	166
35	34	29	17	80	9	14	12	70	3 944	0,8	6,6	25 500	34 800	393	536	182	248

[1] Dynamic load capacities and moments are based on a travel life of 100 km. Please refer to to publication 07061 for further details.

LLTHR rails

For mounting from above, supplied with protective plastic caps as standard (**fig. 25**).

Note:
If a rail length is required that exceeds the maximum length available, joined rails can be ordered. These rails are manufactured to match seamlessly to each other.

Fig. 25

Standard rail size	Accuracy class[1]	Designations[2]		Pitch
		One-piece rail	Multi–piece rail	
				F
–		–		mm
15	P5	LLTHR 15 – ... P5	LLTHR 15 – ... P5 A	**60**
	P3	LLTHR 15 – ... P3	LLTHR 15 – ... P3 A	
	▶ P1	**LLTHR 15 – ... P1**	**LLTHR 15 – ... P1 A**	
20	P5	LLTHR 20 – ... P5	LLTHR 20 – ... P5 A	**60**
	P3	LLTHR 20 – ... P3	LLTHR 20 – ... P3 A	
	▶ P1	**LLTHR 20 – ... P1**	**LLTHR 20 – ... P1 A**	
25	P5	LLTHR 25 – ... P5	LLTHR 25 – ... P5 A	**60**
	P3	LLTHR 25 – ... P3	LLTHR 25 – ... P3 A	
	▶ P1	**LLTHR 25 – ... P1**	**LLTHR 25 – ... P1 A**	
30	P5	LLTHR 30 – ... P5	LLTHR 30 – ... P5 A	**80**
	P3	LLTHR 30 – ... P3	LLTHR 30 – ... P3 A	
	▶ P1	**LLTHR 30 – ... P1**	**LLTHR 30 – ... P1 A**	
35	P5	LLTHR 35 – ... P5	LLTHR 35 – ... P5 A	**80**
	P3	LLTHR 35 – ... P3	LLTHR 35 – ... P3 A	
	▶ P1	**LLTHR 35 – ... P1**	**LLTHR 35 – ... P1 A**	
45	P5	LLTHR 45 – ... P5	LLTHR 45 – ... P5 A	**105**
	P3	LLTHR 45 – ... P3	LLTHR 45 – ... P3 A	
	▶ P1	**LLTHR 45 – ... P1**	**LLTHR 45 – ... P1 A**	

[1] ▶ P1 only available as system.
[2] ■ Preferred range. For system designation, please refer to designation system on **page 61**.

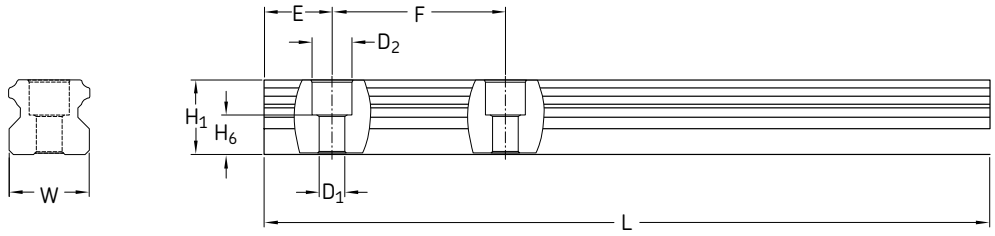

Size	Dimensions									Weight
	W	H_1	H_6	D_1	D_2	E_{min} -0,75	E_{max} -0,75	F	L_{max} -1,5	
–	mm									kg/m
15	15	14	8,5	4,5	7,5	10	50	60	3 920	1,4
20	20	18	9,3	6	9,5	10	50	60	3 920	2,3
25	23	22	12,3	7	11	10	50	60	3 920	3,3
30	28	26	13,8	9	14	12	70	80	3 944	4,8
35	34	29	17	9	14	12	70	80	3 944	6,6
45	45	38	20,8	14	20	16	90	105	3 917	11,3

The “E” dimension designates the distance from the rail end to centre of the first attachment hole. If no customer-specific “E” dimension is provided with the order, the rails are produced according to the following formulae:

- **Calculation of number of attachment holes in railguide:**

(1) $n_{real} = \frac{L}{F}$

n_{real} = Real calculation value for number of hole distances
L = Rail length
F = Distance of attachment holes

(2) Round down of n_{real} to n

(3) n + 1 = z

z = Number of attachment holes in rail

- **Determination of E-dimension based on z:**

(4) $E_{real} = \frac{[L - F \times (z - 1)]}{2}$

E_{real} = Real calculation value for E-dimension
E_{min} = Minimum E-dimension acc. to catalogue

- **Comparison with catalogue value of E_{min}:**

(4.1) If $E_{real} \geq E_{min}$ → Usage of E_{real} from formula **(4)**

(4.2) If $E_{real} < E_{min}$ → Calculation of E_{real} acc. to formula **(5)**

(5) $E_{real} = \frac{[L - F \times (z - 2)]}{2}$

LLTHR .. D4 rails

For mounting from below (**fig. 26**).

Note:
If a rail length is required that exceeds the maximum length available, joined rails can be ordered. These rails are manufactured to match seamlessly to each other.

Fig. 26

Standard rail size	Accuracy class[1]	Designations[2]		Pitch
		One-piece rail	Multi–piece rail	
				F
–		–		mm
15	P5 D4	LLTHR 15 – ... P5 D4	LLTHR 15 – ... P5 A D4	**60**
	P3 D4	LLTHR 15 – ... P3 D4	LLTHR 15 – ... P3 A D4	
	▶ P1 D4	**LLTHR 15 – ... P1 D4**	**LLTHR 15 – ... P1 A D4**	
20	P5 D4	LLTHR 20 – ... P5 D4	LLTHR 20 – ... P5 A D4	**60**
	P3 D4	LLTHR 20 – ... P3 D4	LLTHR 20 – ... P3 A D4	
	▶ P1 D4	**LLTHR 20 – ... P1 D4**	**LLTHR 20 – ... P1 A D4**	
25	P5 D4	LLTHR 25 – ... P5 D4	LLTHR 25 – ... P5 A D4	**60**
	P3 D4	LLTHR 25 – ... P3 D4	LLTHR 25 – ... P3 A D4	
	▶ P1 D4	**LLTHR 25 – ... P1 D4**	**LLTHR 25 – ... P1 A D4**	
30	P5 D4	LLTHR 30 – ... P5 D4	LLTHR 30 – ... P5 A D4	**80**
	P3 D4	LLTHR 30 – ... P3 D4	LLTHR 30 – ... P3 A D4	
	▶ P1 D4	**LLTHR 30 – ... P1 D4**	**LLTHR 30 – ... P1 A D4**	
35	P5 D4	LLTHR 35 – ... P5 D4	LLTHR 35 – ... P5 A D4	**80**
	P3 D4	LLTHR 35 – ... P3 D4	LLTHR 35 – ... P3 A D4	
	▶ P1 D4	**LLTHR 35 – ... P1 D4**	**LLTHR 35 – ... P1 A D4**	
45	P5 D4	LLTHR 45 – ... P5 D4	LLTHR 45 – ... P5 A D4	**105**
	P3 D4	LLTHR 45 – ... P3 D4	LLTHR 45 – ... P3 A D4	
	▶ P1 D4	**LLTHR 45 – ... P1 D4**	**LLTHR 45 – ... P1 A D4**	

[1] ▶ P1 only available as system.
[2] ■ Preferred range. For system designation, please refer to designation system on **page 61**.

LLTHR .. D4 rails

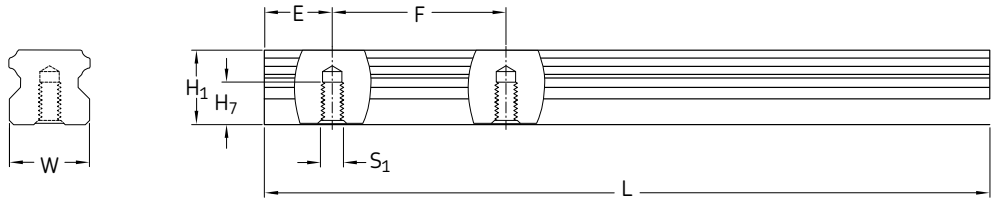

Size	Dimensions								Weight
	W	H_1	H_7	S_1	E_{min} -0,75	E_{max} -0,75	F	L_{max} -1,5	
–	mm								kg/m
15	15	14	8	M5	10	50	60	3 920	1,4
20	20	18	10	M6	10	50	60	3 920	2,4
25	23	22	12	M6	10	50	60	3 920	3,4
30	28	26	15	M8	12	70	80	3 944	5,0
35	34	29	17	M8	12	70	80	3 944	6,8
45	45	38	24	M12	16	90	105	3 917	11,8

The “E” dimension designates the distance from the rail end to centre of the first attachment hole. If no customer-specific “E” dimension is provided with the order, the rails are produced according to the following formulae:

- **Calculation of number of attachment holes in railguide:**

(1) $n_{real} = \frac{L}{F}$

n_{real} = Real calculation value for number of hole distances
L = Rail length
F = Distance of attachment holes

(2) Round down of n_{real} to n

(3) n + 1 = z

z = Number of attachment holes in rail

- **Determination of E-dimension based on z:**

(4) $E_{real} = \frac{[L - F \times (z - 1)]}{2}$

E_{real} = Real calculation value for E-dimension
E_{min} = Minimum E-dimension acc. to catalogue

- **Comparison with catalogue value of E_{min}:**

(4.1) If $E_{real} \geq E_{min}$ → Usage of E_{real} from formula **(4)**

(4.2) If $E_{real} < E_{min}$ → Calculation of E_{real} acc. to formula **(5)**

(5) $E_{real} = \frac{[L - F \times (z - 2)]}{2}$

Accessories

Accessories

Item name	Illustration[1)]	Purpose
Scraper plate	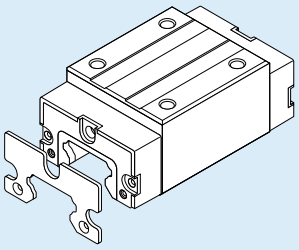	Scraper plates are spring-steel, non-contact components. They protect the front seal from, for example, coarse contaminants or hot metal chips.
Additional front seal	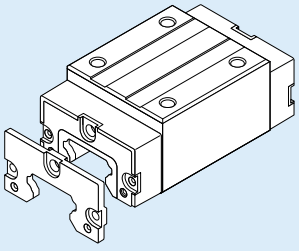	Additional front seals are contact seals that can be attached to the carriage end faces. They are single-lip seals consisting of special heavy-duty material and offer additional protection against liquids and smaller contaminants.
Seal kit	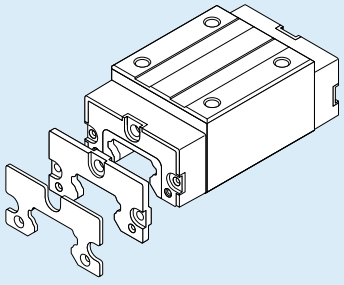	The seal kit consists of a metal scraper and an additional front seal. It is intended for applications involving exposure to coarse and fine dirt as well as liquids.
Bellows	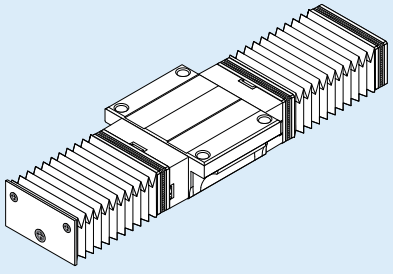	Bellows protect the entire system against solid and liquid contaminants from above. They are suitable for highly contaminated environments like machining centres in the woodworking and metals industries.

[1)] Illustrations show size 35. Appearance can vary slightly depending on the size.

Scraper plate

- Material: spring steel according to DIN EN 10088
- Appearance: black
- Designed with a specified maximum gap of 0,2 to 0,3 mm

Mounting
Mounting screws are supplied as standard. When mounting, be sure there is an even space between the rail and scraper plate.

Note:
Can be ordered in combination with an additional front seal as a kit, using the designation LLTHZ ... S3.

Scraper plate

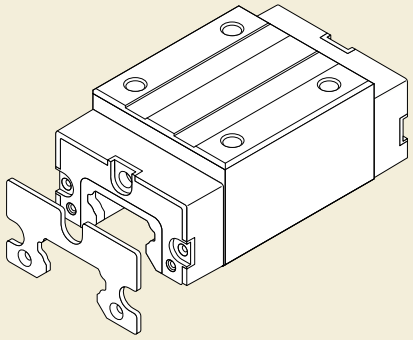

[1] Illustrations show size 35. Appearance can vary slightly depending on the size.

Scraper plate

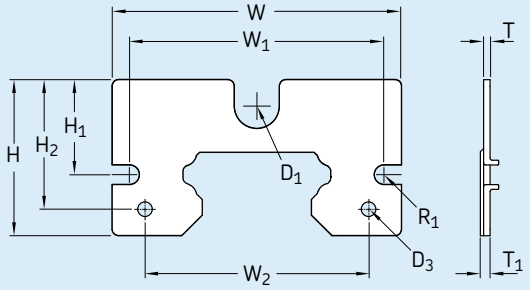

Size	Part designation	Dimensions										
		D_1	D_3[1]	R_1	W	W_1	W_2	H	H_1	H_2	T	T_1 max
–	–	mm										
15	**LLTHZ 15 S1**	3,6	–	1,75	31,6	25,8	–	18,5	12	–	1,5	1,8
20	**LLTHZ 20 S1**	5,5	–	1,75	42,6	35	–	24,2	14,8	–	1,5	1,8
25	**LLTHZ 25 S1**	5,5	–	2,25	46,6	39,6	–	27,7	16,8	–	1,5	1,8
30	**LLTHZ 30 S1**	6,5	–	1,75	57	50	–	30,4	19,3	–	1,5	1,8
35	**LLTHZ 35 S1**	6,5	3,4	2,25	67,3	59,2	52	36,3	22,1	30,1	1,5	1,8
45	**LLTHZ 45 S1**	6,5	3,4	2,75	83,3	72	67	44,2	27,5	38,3	1,5	1,8

[1] If longer grease nipple and screws are needed, they are included.

Additional front seal

- Material: Elastomer
- Design: single-lip seal

Mounting
Mounting screws are supplied as standard.

Note:
Can be ordered in combination with a scraper plate as a kit, using the designation LLTHZ ... S3.

Additional front seal

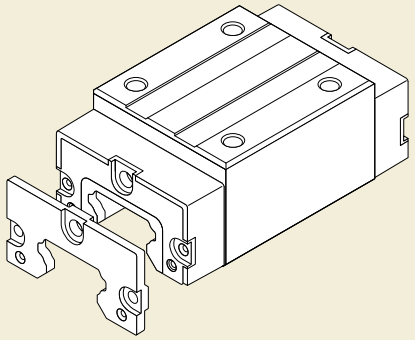

[1] Illustrations show size 35. Appearance can vary slightly depending on the size.

Additional front seal

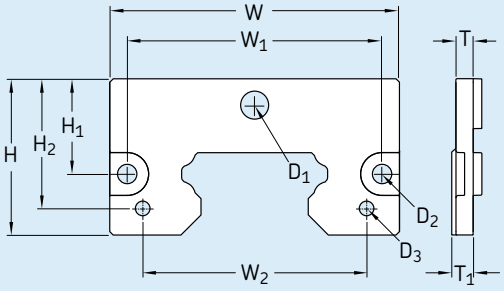

Size	Part designation	Dimensions										
		D_1	D_2	D_3[1]	W	W_1	W_2	H	H_1	H_2	T	T_1
–	–	mm										
15	**LLTHZ 15 S7**	3,6	3,4	–	31,6	25,8	–	18,5	12	–	3	4
20	**LLTHZ 20 S7**	5,5	3,4	–	42,6	35	–	24,2	14,8	–	3	4
25	**LLTHZ 25 S7**	5,5	4,5	–	46,6	39,6	–	27,7	16,8	–	3	4
30	**LLTHZ 30 S7**	6,5	3,4	–	57,9	50	–	31,5	19,3	–	4	5
35	**LLTHZ 35 S7**	6,5	4,5	3,4	67,3	59,2	52	36,3	22,1	30,1	4	5
45	**LLTHZ 45 S7**	6,5	5,5	3,4	83,3	72	67	44,2	27,5	38,3	4	5

[1] If longer grease nipple and screws are needed, they are included.

Seal kit

The seal kit consists of the following components:
- Scraper plate
- Additional front seal

Seal kit

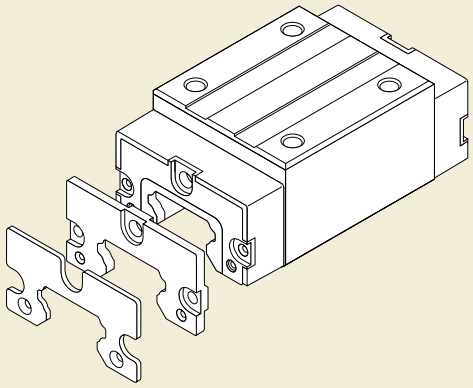

[1] Illustrations show size 35. Appearance can vary slightly depending on the size.

Seal kit

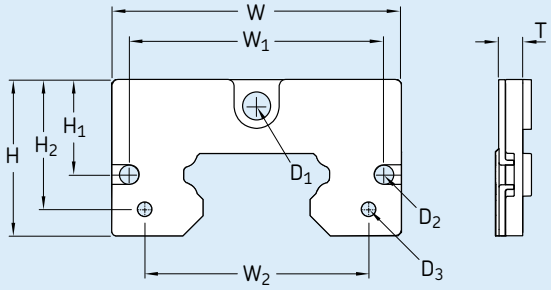

Size	Part designation	Dimensions									
		D_1	D_2	D_3[1]	W	W_1	W_2	H	H_1	H_2	T
–	–	mm									
15	**LLTHZ 15 S3**	3,6	3,4	–	31,6	25,8	–	18,5	12	–	4
20	**LLTHZ 20 S3**	5,5	3,4	–	42,6	35	–	24,2	14,8	–	4
25	**LLTHZ 25 S3**	5,5	4,5	–	46,6	39,6	–	27,7	16,8	–	4
30	**LLTHZ 30 S3**	6,5	3,4	–	57,9	50	–	31,5	19,3	–	5
35	**LLTHZ 35 S3**	6,5	4,5	3,4	67,3	59,2	52	36,3	22,1	30,1	5
45	**LLTHZ 45 S3**	6,5	5,5	3,4	83,3	72	67	44,2	27,5	38,3	5

[1] If longer grease nipple and screws are needed, they are included.

Bellows

Temperature resistance

t_{max} = 90 °C.
During continuous operation, the allowed temperature range is from –20 to 80 °C. Special materials for higher temperature resistance are available on request.

Material

Bellows are made of polyester fabric with a polyurethane coating. Adapter plates are made of aluminium.

Bellows kit contents (fig. 27)

1 Adapter plate
2 Grease nipple
3 Sealing ring
4 Set screw
5 Mounting screws
6 Bellows with all plates pre-assembled.

Note:
Rail ends need to be prepared with threaded holes

Fig. 27

Delivery scope

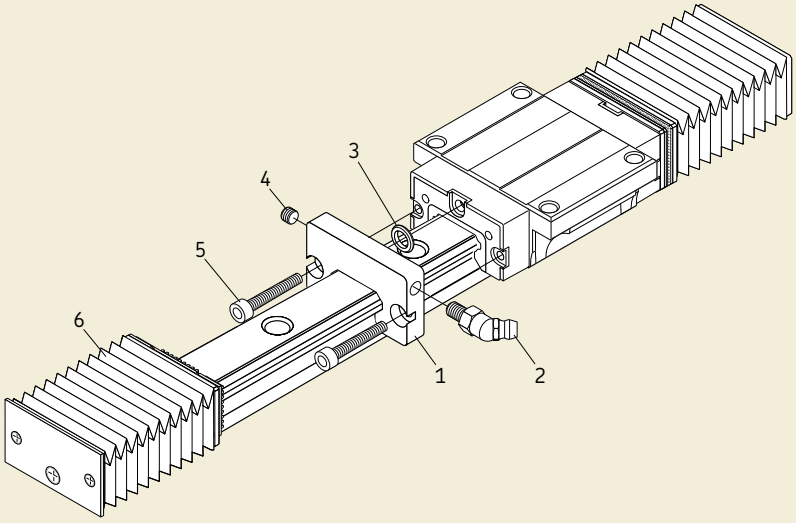

Table 14

Bellows designations[1)]

Size	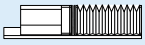 **Type 2** with fastening plate for the carriage and end plate for the rail	**Type 4** with two fastening plates for the carriages	**Type 9** loose bellows (spare part)
–	–		
15	LLTHZ 15 B2 ..	LLTHZ 15 B4 ..	LLTHZ 15 ..
20	LLTHZ 20 B2 ..	LLTHZ 20 B4 ..	LLTHZ 20 ..
25	LLTHZ 25 B2 ..	LLTHZ 25 B4 ..	LLTHZ 25 ..
30	LLTHZ 30 B2 ..	LLTHZ 30 B4 ..	LLTHZ 30 ..
35	LLTHZ 35 B2 ..	LLTHZ 35 B4 ..	LLTHZ 35 ..
45	LLTHZ 45 B2 ..	LLTHZ 45 B4 ..	LLTHZ 45 ..

[1)] Replace ".." by number of folds per bellow.

Mounting

The bellows are partly pre-assembled. The mounting screws are supplied.

Note:
Prior to mounting, the grease nipples on the carriage must be removed.

For bellow arrangement type 2 (**table 14**), the end faces of the rails have to be equipped with threaded fixation holes.

Calculation of the bellows type 2[1)]

$$n = \frac{L - L_A}{W_{4\,min} + W_{4\,max}} + 2$$

Calculation of the rail length

$L = (n - 2)(W_{4\,min} + W_{4\,max}) + L_A$
$L_{min} = n\, W_{4\,min}$
$L_{max} = n\, W_{4\,max}$
$Stroke = n\, S_F$

where
L_A = Carriage length L_1 (please refer to the dimension tables of the carriages) plus 2 · 10 mm for the adapter plates.
L = Rail length [mm]
Lmax = Bellows stretched
Lmin = Bellow pushed together
n = total number of folds per carriage side
W_4 = maximum and minimum extension per fold
Stroke = Stroke [mm]
SF = Stroke per fold (**table 15**)

Table 15

Dimensions of the bellows

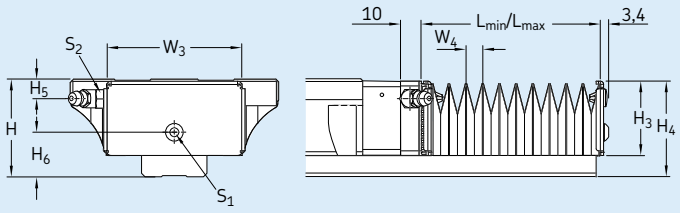

Size	Dimensions											
	W_3	$H^{1)}$	$H^{2)}$	H_3	H_4	H_5	H_6	S_1	S_2	$W_{4\,min}$	$W_{4\,max}$	S_F
–	mm											
15	32	24	28	18,9	23,5	3,8	8,8	M4	M5	2,5	9,6	7,1
20	43	30	30	24,5	29,5	5,2	12	M4	M5	2,5	12	9,5
25	47	36	40	28	35	5,5	15,5	M4	M5	2,5	12	9,5
30	58	42	45	32	41	7	19	M4	M6	2,5	16,9	14,4
35	68	48	55	37	47	6,5	21,5	M4	M6	2,5	21	18,5
45	84	60	70	45	59	7,5	28,5	M4	M6	2,5	25,2	22,7

[1)] For carraiges of type A, LA, U, SU
[2)] For carraiges of type R, LR

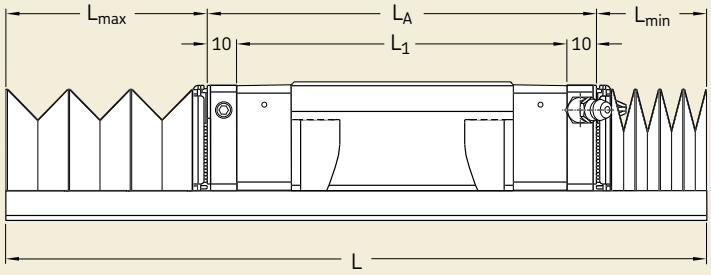

[1)] Calculation for maximum possible stroke. Calculation of bellow type 4 on request, specifications on stroke length required.

Applications

In response to our customer's ultimate need to produce more with less, SKF has combined its knowledge and experience with the latest technology to develop solutions for your specific conditions. Whether your goal is to design equipment that provides more customer value, or to increase overall profitability, with SKF experience and expertise, you're likely to find a real solution.

Woodworking

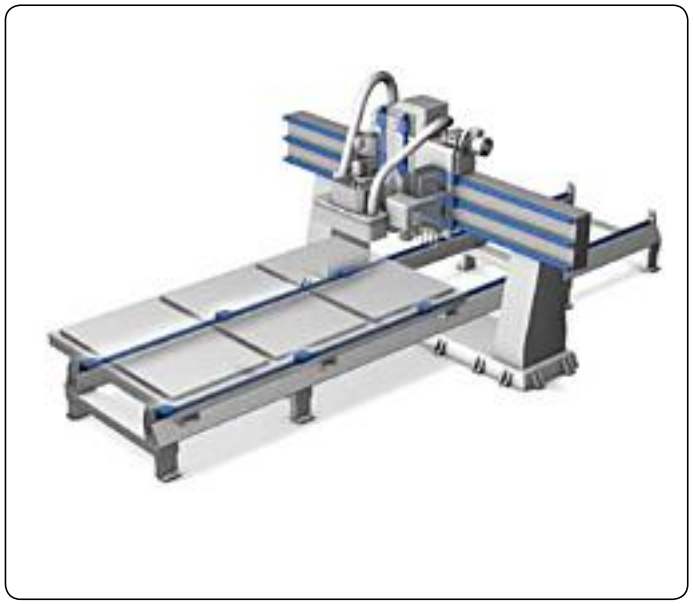

Components application
a) Profile rail guides
b) Precision ball screws

Plastic injection moulding

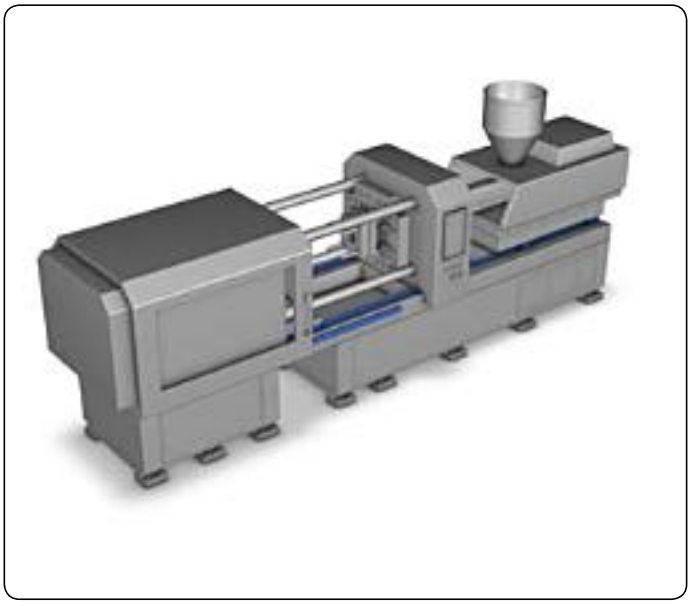

Components application
a) Profile rail guides

Handling

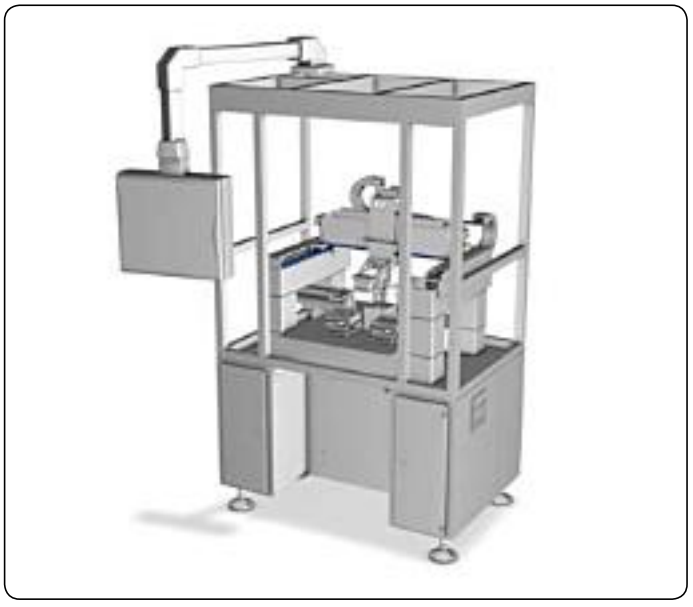

Components application
a) Profile rail guides

Packaging

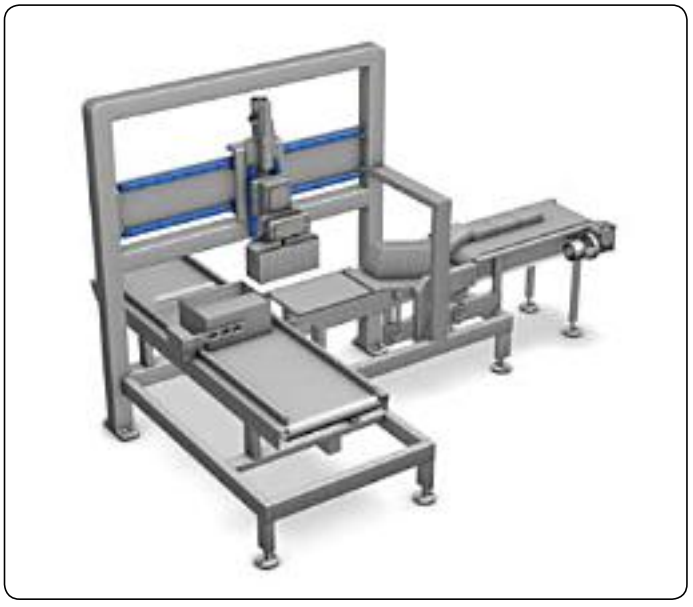

Components application
a) Profile rail guides

Miniature profile rail guides

In response to the market trend for increased performance with a minimum of mounting space, SKF has extended its product range to miniature profile rail guides (**fig. 28**).

These linear guides are designed primarily for applications in precision mechanics, medical engineering, microassembly and the optics industry.

The close cooperation with numerous customers, combined with SKF's experience, has resulted in a range of miniature rail guides that set new standards. Especially when the mounting space is limited, SKF miniature profile rail guides are an excellent choice as they have a high load-carrying capacity combined with a compact design.

SKF offers its customers an excellent technical advisory service as well as a vast modular range to increase machine and installation performance.

SKF offers these profile rail guides in four sizes (7, 9, 12 and 15 mm) and various slide options to cover most application requirements.

Compact design: thanks to their simple structure, miniature profile rail guides are compact and economical. This small and lightweight product is very suitable for high-speed linear motion up to 3 m/s.

Long-life: gothic arch grooves at the raceway contacts enable the slide to sustain loads and moments from any direction. The raceway shape offers a large load capacity and a long lifetime due to the contact between the raceways and the balls.

Corrosion resistant: all parts of the system are made of stainless steel or plastic material and are thus resistant to corrosion.

Easy to maintain: oil holes in the end caps of the carriage make it easy to relubricate the system.

Structure: four-point contact ball recirculation system with identical load angles and 2 ball recirculation paths per carriage for unlimited stroke.

Range: four different types (7, 9, 12, 15) comprising different widths and carriage lengths (**fig. 29**).

Fig. 28

Fig. 29

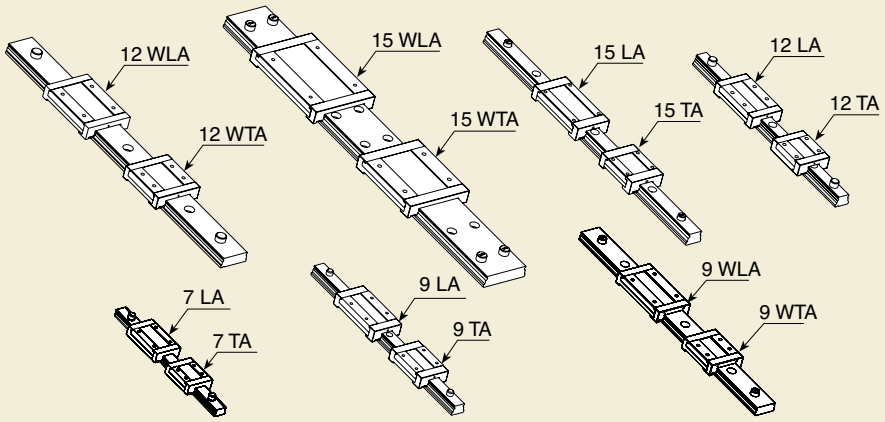

N.B.:
In addition to this catalogue, all product brochures are available on **www.skf.com** *as PDF files.*

Publication nr. 4753 EN

2 Linear guides
Miniature profile rail guides

The preload possibilities for carriage are given in **table 16**, and the technical data in **table 17**.

Table 16

	T0*	T1*	T2*
TA	×	×	×
LA	×	×	×

* T0 = standard – light preload
* T1 = medium preload
* T2 = heavy preload

Preload possibilities for carriage

Table 17

Rail material:	Stainless steel 1.4034
Carriage material:	Stainless steel 1.4034 with return zones of POM
Ball material:	Stainless steel 1.4034
Sealing material:	Desmopan
Temperature range:	from – 20 °C up to + 80 °C
Speed:	up to 3 m/s max.
Acceleration:	up to 80 m/s^2 max.

Technical data

Fig. 30

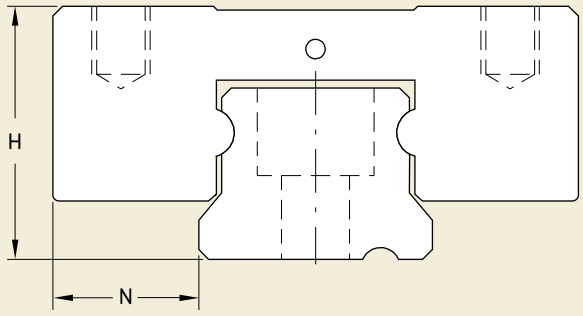

System accuracy

The system accuracy (**fig. 30**) and the system tolerance (**fig. 31**) of different guidance systems are given in **table 18**.

Fig. 31

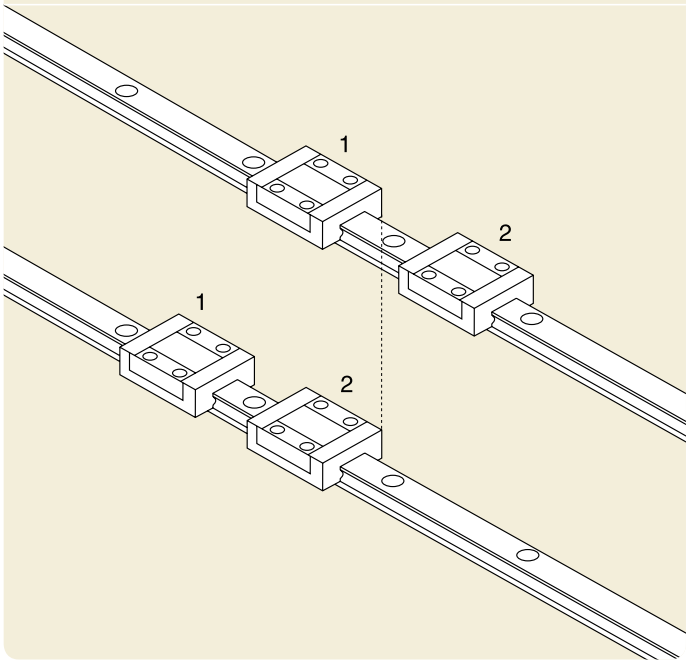

System tolerance

Table 18

Dimension		Class P1	P5
		µm	µm
H*	Dimension tolerance	± 10	± 20
N*	Dimension tolerance	± 15	± 25
$\Delta H_{1)}$**	Maximum tolerance for paired systems or carriages at identical rail position	± 7	± 15
ΔN**	Maximum tolerance for paired systems or carriages at identical rail position	± 7	± 15

* The tolerances apply over the entire guide length for any combination of carriage and rail.
** The dimensions ΔH and ΔN relate to the ideal centre of the carriage. Each dimension is derived from the mean value of two measured points with identical centre distance.

System accuracy and tolerance of different guidance systems

The running parallelism accuracy in operation of paired systems are given in **diagram 1** and **fig. 32**.

Diagram 1

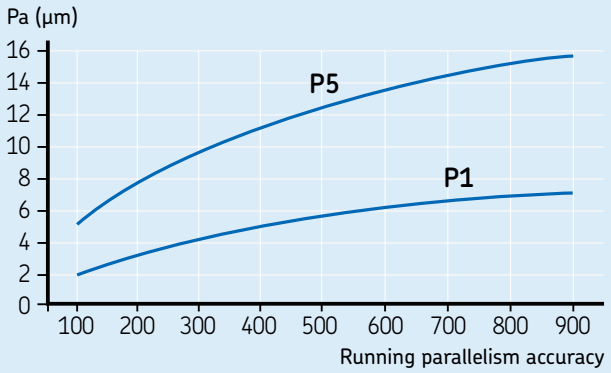

Fig. 32

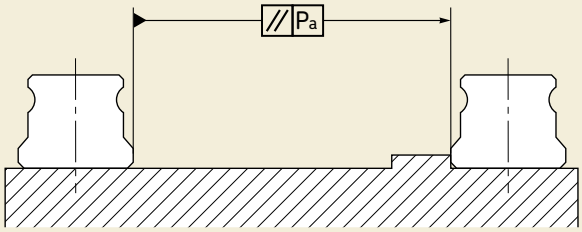

The positioning (distance) tolerance of rail attachment holes can be seen in **figure 33**.

Fig. 33

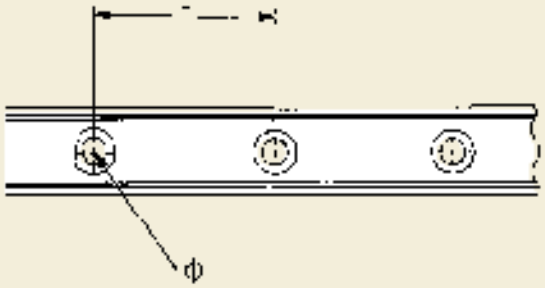

2 Linear guides

Miniature profile rail guides

Ordering key

LLM								-					E=0

Type

Rail type:

Standard rail	H
Wide rail	W

Product code:

System (rail + carriage)	S
Rail	R
Carriage	C

Size:

7, 9, 12, 15

Carriage types:

Standard carriage	TA
Long carriage	LA

Option:

Carriage with seals	R
Carriage without seal	no sign

Number of carriages:

1, 2, C9, n

Preload:

Light clearance	T0
Medium preload	T1
Preloaded	T2

Length of rail track:

Max 1 000 mm

Precision class:

Standard precision (suitable for most applications)	P5
High precision	P1

Number of rail track used in parallel:

One rail alone	W1
Two rails in parallel	W2

Auxiliary symbols:

Plastic end-stop	no sign
Steel end-stop	M

Distance between end face and the first hole (mm):

Symmetric holes standard E=0

Example: LLM HS 12 TA R 2 T0 - 700 P1 W2 M E=0

LLMHR

Standard rails

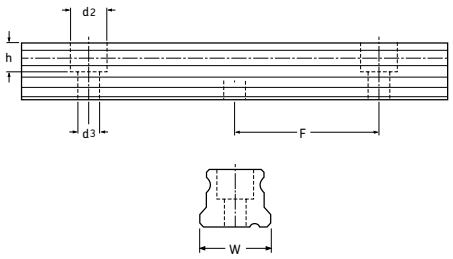

Designations	Dimensions					Max. length
	W	F	d_2	d_3	h	
	mm					
LLMHR 7	7	15	4,5	2,5	2,5	1 000
LLMHR 9	9	20	6	3,5	3,5	1 000
LLMHR 12	12	25	6	3,5	4,5	1 000
LLMHR 15	15	40	6	3,5	4,5	1 000

LLMWR

Wide rails

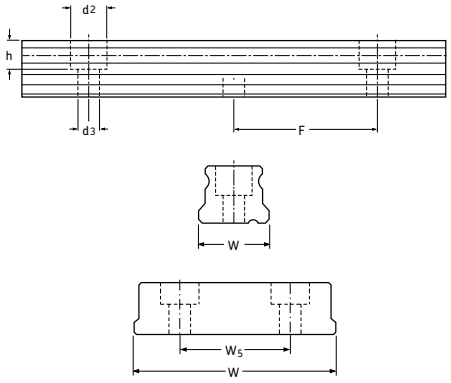

LLMWR .. 15 design

Designations	Dimensions						Max. length
	W	W_5	F	d_2	d_3	h	
	mm						
LLMWR 9	18	0	30	6	3,5	4,5	1 000
LLMWR 12	24	0	40	8	4,5	4,5	1 000
LLMWR 15	42	23	40	8	4,5	4,5	1 000

LLMHC .. TA

Standard carriages

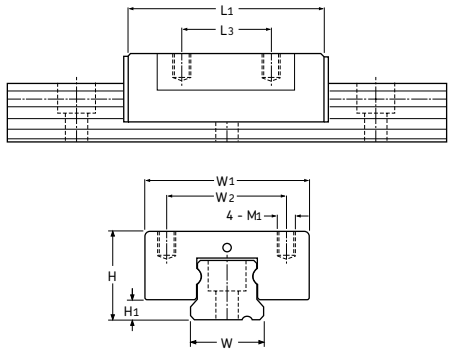

Designations	Dimensions								Load-carrying capacities dynamic	static
	W	W_1	W_2	H	L_1	L_3	M_1	H_1	C	C_0
	mm									
LLMHC 7 TA	7	17	12	8	22	8	M2×2,5	1,5	860	1 670
LLMHC 9 TA	9	20	15	10	30	10	M3×3	2	1 850	3 130
LLMHC 12 TA	12	27	20	13	33	15	M3×3,5	3	2 550	4 000
LLMHC 15 TA	15	32	25	16	41,5	20	M3×4	4	2 880	5 390

2 Linear guides
Miniature profile rail guides

LLMWC .. TA

Carriages for wide rails

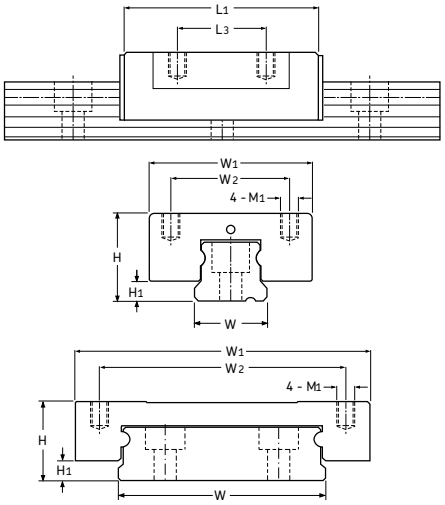

LLMWC .. 15 design

Designations	Dimensions								Load-carrying capacities	
									dynamic	static
	W	W_1	W_2	H	L_1	L_3	M_1	H_1	C	C_0
	mm									
LLMWC 9 TA	18	30	21	12	36,5	12	M3×3	2	1 785	3 330
LLMWC 12 TA	24	40	28	14	42,5	15	M3×3,5	3	3 300	5 780
LLMWC 15 TA	42	60	45	16	51,2	20	M4×4,5	4	3 890	7 060

LLMHC .. LA

Long carriages

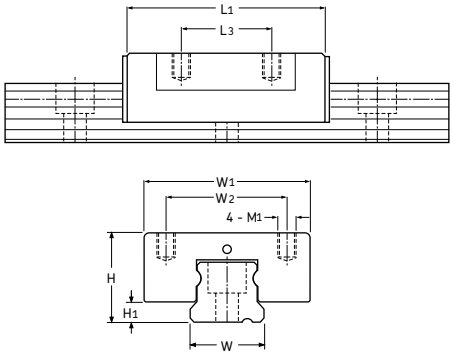

Designations	Dimensions								Load-carrying capacities	
									dynamic	static
	W	W_1	W_2	H	L_1	L_3	M_1	H_1	C	C_0
	mm									
LLMHC 7 LA	7	17	12	8	29,5	12	M2×2,5	1,5	1 400	2 700
LLMHC 9 LA	9	20	15	10	38,5	15	M3×3	2	2 295	4 270
LLMHC 12 LA	12	27	20	13	45	20	M3×3,5	3	3 470	6 225
LLMHC 15 LA	15	32	25	16	57,5	25	M3×4	4	4 670	8 720

LLMWC .. LA

Long carriages for wide rails

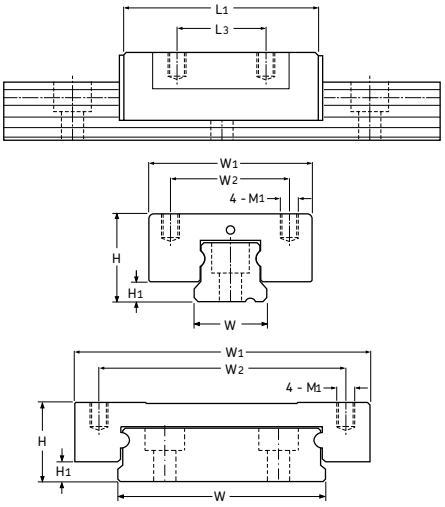

Designations	Dimensions								Load-carrying capacities	
									dynamic	static
	W	W_1	W_2	H	L_1	L_3	M_1	H_1	C	C_0
	mm									
LLMWC 9 LA	18	30	23	12	48,5	24	M3×3	2	2 640	4 900
LLMWC 12 LA	24	40	28	14	56	28	M3×3,5	3	4 150	8 000
LLMWC 15 LA	42	60	45	16	70,5	35	M4×4,5	4	5 830	10 600

Applications

In response to our customer's ultimate need to produce more with less, SKF has combined its knowledge and experience with the latest technology to develop solutions for your specific conditions. Whether your goal is to design equipment that provides more customer value, or to increase overall profitability, with SKF experience and expertise, you're likely to find a real solution.

Laboratory equipment

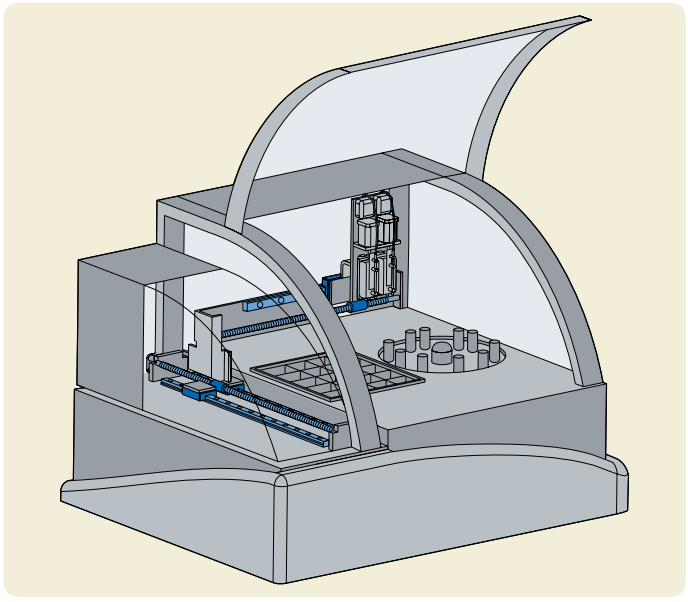

Components application
a) Miniature profile rail guides
b) Miniature ball screws
c) Miniature slides

PCB drilling and routing machine

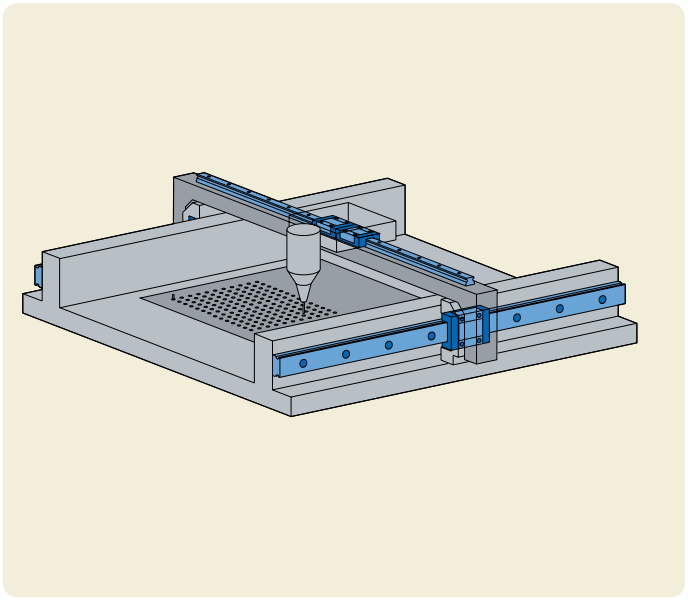

Components application
a) Miniature profile rail guides

Pick-and-place manipulators

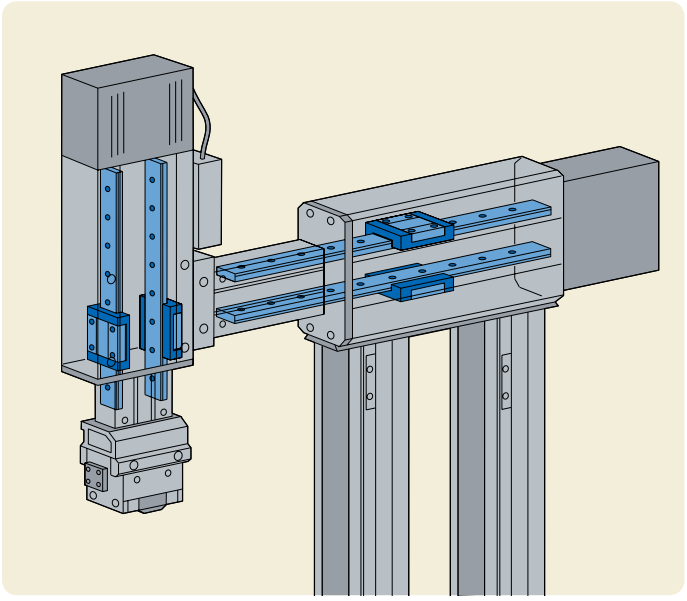

Components application
a) Miniature profile rail guides

Pneumatic industry - Compact piston rod cylinder

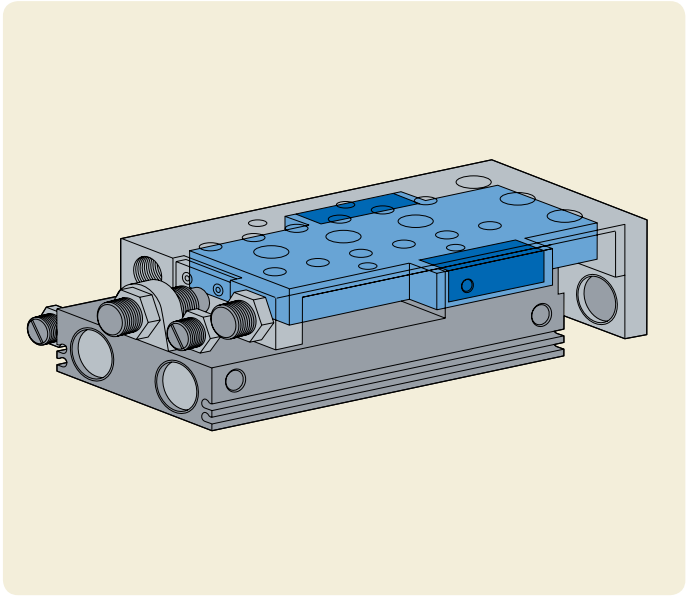

Components application
a) Integrated miniature slides

More precision for more performance

Have you ever wondered how a bird's nest, which appears to be so fragile, can withstand the heaviest rain and strong winds? Birds can weave even the smallest twigs with great precision to form the supporting structure of the nest for the protection of their eggs and new-born chicks from the weather.

This small miracle of nature has given SKF the inspiration to create solutions to satisfy a wide variety of requests for precision with micrometer accuracy products like precision rail guides, also available with a state-of-the art anti-creep system. And precision slides are high quality tools for linear motion which are, ideally suited for uses in a wide range of applications where close tolerances are demanded.

SKF products are created to build the future.

Precision rail guides

Modular range rail guides

The modular range consists of a matrix range of rail guide modules which enable an individual choice of combinations of rails and rolling element assemblies. Different requirements for the guides do not call for changes in the design or mechanical environment. Selection of the adequate rail guide is made depending on the mechanical conditions of the application.

These operating requirements are covered by six different models (**fig. 34**) that may be defined as rail guides with:

- cross roller cages for the standard LWR series
- ball cages for the LWRB series
- cross roller cages for the optimised LWRE series
- cross roller cages with anti cage-creep system (ACSM) for the LWRE series
- needle roller cages for the LWRM/LWRV series and
- slide liners as raceways for the LWRPM/LWRPV series.

Precision rail guides are suitable for applications with limited strokes requiring high stiffness and positioning accuracy.

The modular range series of rails makes it possible to select internal design and/or rolling elements to suit application requirements without changing the envelope dimensions of the rails.

The modular rail range, which is completely interchangeable, is shown in **table 19**. This range is suitable for applications with limited strokes requiring high stiffness and positioning accuracy.

Fig. 34

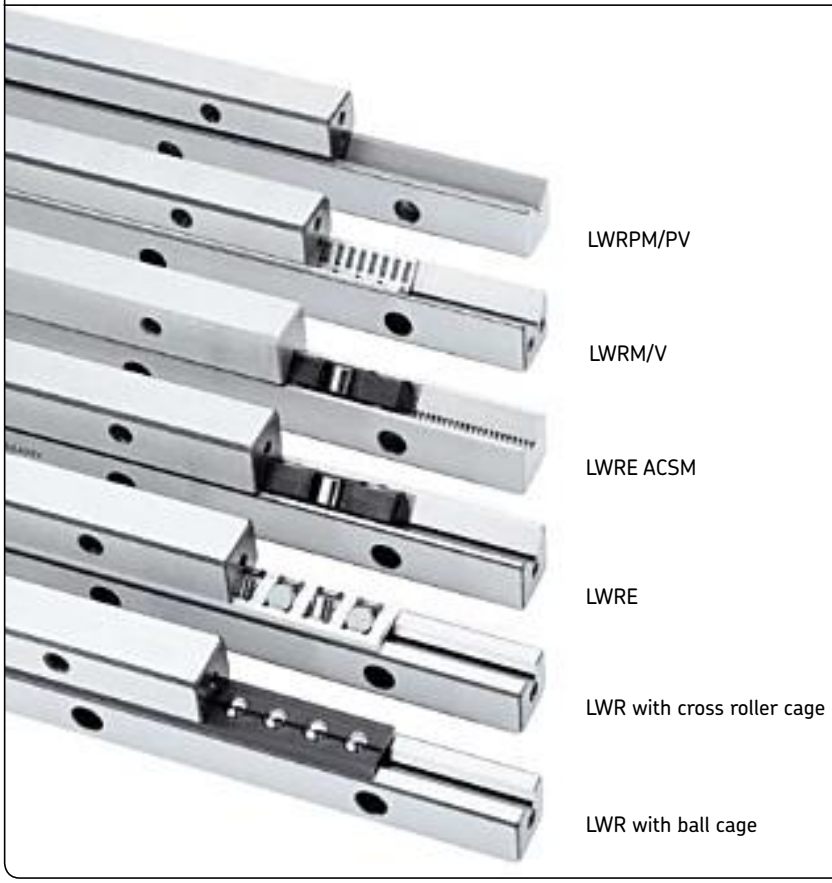

Table 19

Modular range: interchangeable rail programme	Basic load rating	Speed	Noise	Stiffness	Precision
Cross rollers LWR					
Cross rollers LWRE					
Needle rollers					
Slide liners					

Anti cage-creep system (ACSM)

The ACSM system prevents the cage-creep effect. It is available for any product from the LWRE range.

The non-slip effect is achieved by an involute toothed cogwheel attached to the cage which is inside the LWRE ACSM rails during operation, thus retaining the cage in its defined position. (**fig. 35**).

This system reliably prevents so-called cage-creep and is mainly used in applications characterised by high rates of acceleration and speeds of travel as well as eccentric loads.

Integration of the ACSM system does not change the mounting dimensions of the LWRE rail guides. This enables LWRE rail guides with ACSM to be used in existing applications without changing the adjacent construction and thus significantly increasing the availability of these machinery elements. Apart from the ACSM system, the former version of ACS is still available. In this version the cogwheel is made of polymer and the stroke length can be specified.

LWRE rail guides with ACS system can be produced in longer sizes.

For further information please consult the SKF catalogue «precision rail guides», publication number 4183 EN.

Fig. 35

Design of an LWRE rail guide with ACSM

N.B.:
In addition to this catalogue, all product brochures are available on **www.skf.com** *as PDF files.*

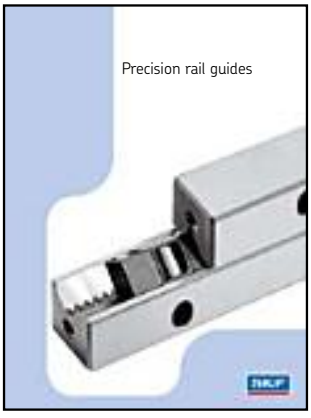

Publication nr. 4183 EN

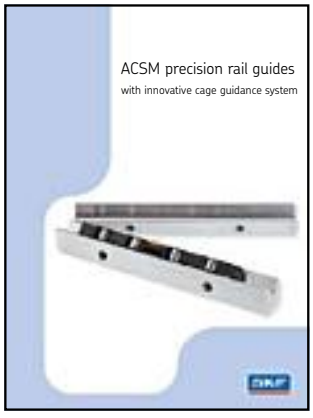

Publication nr. 6602 EN

Ordering key

LW				

Type

Designation type:

Rail guide (sizes: 3/6/9/12/15/18/24)	R
Rail guide (sizes: 1/2)	RB
Plastic ball-retaining cage (sizes: 1/2/3/6/9/12)	JK
Cross rollers in plastic cage (size: 3)	AK
Cross rollers in aluminium cage (sizes: 6/9/12)	AL
End stop for low load and horizontal mounting (sizes: 1/2/3/6/9/12/15/18/24)	ERA
Special attachment screw (sizes: 3/4/6/9/12/15/18/24)	GD
Rail guide (sizes: 3/4/6/9)	RE
Cross roller plastic cage (sizes: 3/4/6/9)	AKE
End stop for general use (sizes: 3/4/6/9/2211)	ERE
Special attachment screw (sizes: 3/4/6/9/2211)	GD
Rail guide for needle roller cage (sizes: 6/9)	RM
Rail guide for needle roller cage (sizes: 6/9)	RV
Needle rollers in aluminium cage (sizes: 6/9)	HW
Needle rollers in polymer cage (sizes: 6/9)	HV
End stop with plastic wiper for general use (sizes: 6/9)	EARM
End stop with plastic wiper for general use (sizes: 6/9)	EARV
Special attachment screw (sizes: 6/9)	GD
Rail guide (sizes: 3015/4020/5025/6030/7040/8050)	M
Rail guide (sizes: 3015/4020/5025/6030/7040/8050)	V
Needle rollers in aluminium cage (sizes: 10/15/20/25/30)	HW
Needle rollers in polymer cage (sizes: 10/15/20/25/30)	HV
End stop with wiper for general use (sizes: 3015/4020/5025/3060/7040/8050)	EAM
End stop with wiper for general use (sizes: 3015/4020/5025/3060/7040/8050)	DIN 84
Attachment screw (sizes: M3/M5/M6)	EAV

Size*:
Specific values are reported on designation type

Length rail guide (mm):

xxxx

Option:

For R	for size 3/6	KIT
	for size 3/4/6	KIT
For RE	anti cage-creep system ACSM	ACSM
	anti cage-creep system ACSM for size 3/6	ACSM-KIT
	anti cage-creep system ACS	ACS
	anti cage-creep system ACS for size 3/4/6	ACS-KIT

Example 1, rail guide:	LW	RE	6	350	ACSM
Example 2, cage:	LW	AKE	6	350	
Example 3, end stop:	LW	ERE	6	×24	
Example 4, screws:	LW	GD	6		

*

Sizes 3/4/6 = 3 digits for length of rail; example:	050
	100
	...
Size 9 = 4 digits for length of rail; example:	0300
	...
	1200
Size 3015 = 3 digits for length of rail; example:	3015100
	3015150
	...
Bigger sizes 4 digits for length of rail; example:	50250200
	...

N.B.:
For information about additional products and accessories, please contact SKF Customer Service.
- LWN / LW0 (sizes 2025-, 2535-, 3045- and 3555-) - LWML series - LWF / LWG series (sizes 412-, 612-, 624-, 1024- and 1434-)

2 Linear guides
Precision rail guides

LWR .. / LWRB ..

LWR rail guides are well-proven, limited-travel linear guides used in numerous applications. They consist of two identical rails where cross roller cages or ball cages are inserted, depending on the application and size.

LWR rail guides with cross roller cages are robust linear bearings with high load-carrying capacity. Their special characteristics make them suitable for a large proportion of linear bearing arrangements with limited travel.

LWRB rail guides with ball cage can be used to advantage where loads are light and easy running is required.

They are available for sizes 1 and 2. Because of the large number of possible combinations, all components of LWR/LWRB rail guides must be ordered separately, for example:

4 rails LWR
2 cross roller cages LWAL
8 end stops LWERA.

LWR .. KIT

The KIT package for the modular range is a unique service provided only by SKF.

Rails

LWR 3-12

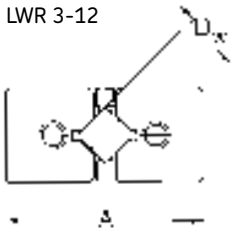

LWRB 1+2

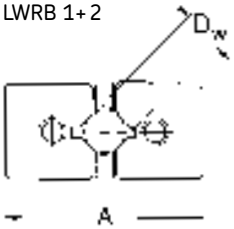

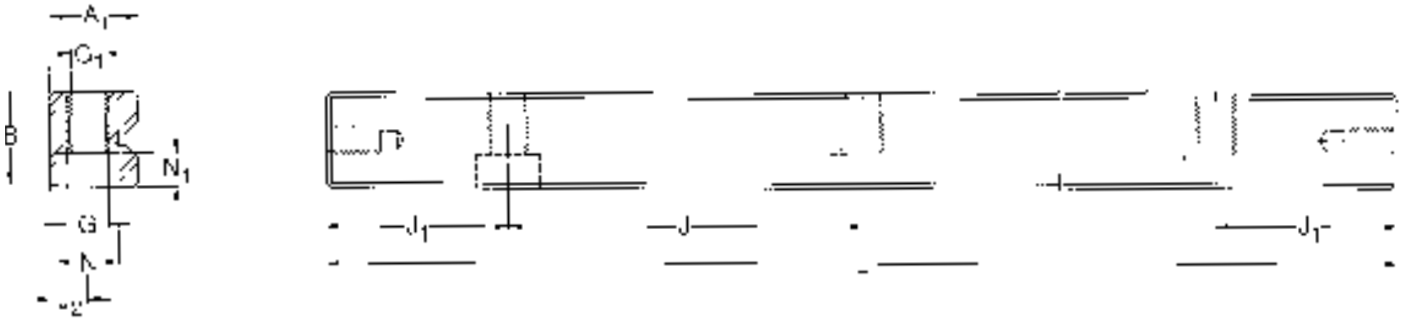

Ball and cross roller cages

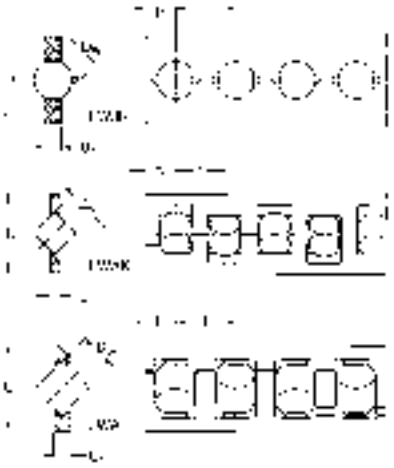

End stops

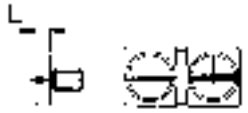

LWERA 1+2

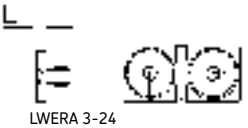

LWERA 3-24

Special attachment screw

LWGD

LWR 3/6 .. KIT

4 rail guides LWR
2 cross roller cages LWAL/LWAK
8 end stops LWERA

Designations	Load ratings* dynamic	static	Stroke	Rail designations	Cage designations
	C	C_0			
	N		mm		
LWR 3050 KIT	999	1 120	26	LWR 3050	LWAK 3×7
LWR 3075 KIT	1 422	1 760	36	LWR 3075	LWAK 3×11
LWR 3100 KIT	1 811	2 400	46	LWR 3100	LWAK 3×15
LWR 3125 KIT	2 088	2 880	66	LWR 3125	LWAK 3×18
LWR 3150 KIT	2 442	3 520	76	LWR 3150	LWAK 3×22
LWR 3175 KIT	2 781	4 160	86	LWR 3175	LWAK 3×26
LWR 3200 KIT	3 110	4 800	96	LWR 3200	LWAK 3×30

* Load ratings for 10 rolling elements
Including 8 end stops LWERA 3

See page 96 for drawing

Designations	Load ratings* dynamic	static	Stroke	Rail designations	Cage designations
	C	C_0			
	N		mm		
LWR 6100 KIT	4 915	5 440	50	LWR 6100	LWAL 6×8
LWR 6150 KIT	6 744	8 160	78	LWR 6150	LWAL 6×12
LWR 6200 KIT	8 441	10 880	106	LWR 6200	LWAL 6×16
LWR 6250 KIT	10 045	13 600	134	LWR 6250	LWAL 6×20
LWR 6300 KIT	11 955	17 000	144	LWR 6300	LWAL 6×25
LWR 6350 KIT	13 422	19 720	172	LWR 6350	LWAL 6×29
LWR 6400 KIT	14 846	22 440	200	LWR 6400	LWAL 6×33

* Load ratings for 10 rolling elements
Including 8 end stops LWERA 6

See page 96 for drawing

2 Linear guides
Precision rail guides

LWRB 1

Designations	Dimensions											Load ratings*				dynamic	static
	A	B	L	L_1	J	J_1	G	G_1	N	N_1	A_1	D_W	U	U_1	t	C	C_0
	mm						–	mm								N	
Rails																	
LWRB 1020	8,5	4	20		10	5	M2	1,7	3	1,4	3,9						
LWRB 1030	8,5	4	30		10	5	M2	1,7	3	1,4	3,9						
LWRB 1040	8,5	4	40		10	5	M2	1,7	3	1,4	3,9						
LWRB 1050	8,5	4	50		10	5	M2	1,7	3	1,4	3,9						
LWRB 1060	8,5	4	60		10	5	M2	1,7	3	1,4	3,9						
Ball cage																	
LWJK 1,588												1,588	3,5	0,5	2,2	410	580
End stop																	
LWERA 1			1	–													

See page 96
for drawing

* Load ratings for 10 rolling elements

LWRB 2

Designations	Dimensions											Load ratings*				dynamic	static
	A	B	L	L_1	J	J_1	G	G_1	N	N_1	A_1	D_W	U	U_1	t	C	C_0
	mm						–	mm								N	
Rails																	
LWRB 2030	12	6	30		15	7,5	M3	2,6	4,4	2	5,5						
LWRB 2045	12	6	45		15	7,5	M3	2,6	4,4	2	5,5						
LWRB 2060	12	6	60		15	7,5	M3	2,6	4,4	2	5,5						
LWRB 2075	12	6	75		15	7,5	M3	2,6	4,4	2	5,5						
LWRB 2090	12	6	90		15	7,5	M3	2,6	4,4	2	5,5						
LWRB 2105	12	6	105		15	7,5	M3	2,6	4,4	2	5,5						
LWRB 2120	12	6	120		15	7,5	M3	2,6	4,4	2	5,5						
Ball cage																	
LWJK 2												2	5	0,75	3	640	720
End stop																	
LWERA 2			1,5	–													

See page 96
for drawing

* Load ratings for 10 rolling elements

LWR 3

Designations	Dimensions															Load ratings* dynamic	static
	A	B	L	L_1	J	J_1	G	G_1	N	N_1	A_1	D_W	U	U_1	t	C	C_0
	mm						–	mm								N	
Rails																	
LWR 3050	18	8	50		25	12,5	M4	3,3	6	3,2	8,2						
LWR 3075	18	8	75		25	12,5	M4	3,3	6	3,2	8,2						
LWR 3100	18	8	100		25	12,5	M4	3,3	6	3,2	8,2						
LWR 3125	18	8	125		25	12,5	M4	3,3	6	3,2	8,2						
LWR 3150	18	8	150		25	12,5	M4	3,3	6	3,2	8,2						
LWR 3175	18	8	175		25	12,5	M4	3,3	6	3,2	8,2						
LWR 3200	18	8	200		25	12,5	M4	3,3	6	3,2	8,2						
LWR 3250	18	8	250		25	12,5	M4	3,3	6	3,2	8,2						
LWR 3300	18	8	300		25	12,5	M4	3,3	6	3,2	8,2						
Roller cage																	
LWAK 3												3	7,5	1	5	1 320	1 600
End stop																	
LWERA 3			2,5	–													
Special attachment screw																	
LWGD 3																	

See page 96 for drawing

* Load ratings for 10 rolling elements

LWR 6

Designations	Dimensions															Load ratings* dynamic	static
	A	B	L	L_1	J	J_1	G	G_1	N	N_1	A_1	D_W	U	U_1	t	C	C_0
	mm						–	mm								N	
Rails																	
LWR 6100	31	15	100		50	25	M6	5,2	9,5	5,2	14						
LWR 6150	31	15	150		50	25	M6	5,2	9,5	5,2	14						
LWR 6200	31	15	200		50	25	M6	5,2	9,5	5,2	14						
LWR 6250	31	15	250		50	25	M6	5,2	9,5	5,2	14						
LWR 6300	31	15	300		50	25	M6	5,2	9,5	5,2	14						
LWR 6350	31	15	350		50	25	M6	5,2	9,5	5,2	14						
LWR 6400	31	15	400		50	25	M6	5,2	9,5	5,2	14						
Roller cage																	
LWAL 6												6	14,8	2,7	9	5 850	6 800
End stop																	
LWERA 6			3	–													
Special attachment screw																	
LWGD 6																	

See page 96 for drawing

* Load ratings for 10 rolling elements

2 Linear guides
Precision rail guides

LWR 9

Designations	Dimensions															Load ratings* dynamic	static
	A	B	L	L_1	J	J_1	G	G_1	N	N_1	A_1	D_W	U	U_1	t	C	C_0
	mm						–	mm								N	
Rails																	
LWR 90200	44	22	200		100	50	M8	6,8	11	6,2	20						
LWR 90300	44	22	300		100	50	M8	6,8	11	6,2	20						
LWR 90400	44	22	400		100	50	M8	6,8	11	6,2	20						
LWR 90500	44	22	500		100	50	M8	6,8	11	6,2	20						
LWR 90600	44	22	600		100	50	M8	6,8	11	6,2	20						
LWR 90700	44	22	700		100	50	M8	6,8	11	6,2	20						
Roller cage																	
LWAL 9												9	20	4	14	17 000	18 300
End stop																	
LWERA 9			4	–													
Special attachment screw																	
LWGD 9																	

See page 96
for drawing

* Load ratings for 10 rolling elements

LWRE ..

LWRE rail guides are a logical development of the proven LWR rail guides.

Within the modular range system, the LWRE rail guides offer an outstanding price/performance ratio.

Alongside the familiar characteristics of the LWR series, the new LWRE rail guides offer the advantages of a fivefold increase in load-carrying capacity and a doubling of the stiffness, achieved through optimised internal geometry in conjunction with larger roller diameters.

LWRE rail guide can be used in a given design space, maintaining the same load-carrying capacity as the LWR.

The mounting and attachment dimensions of the LWRE 3, 6, 9 rail guides conform to those of all SKF modular range rail guides presented in this catalogue.

LWRE rail guides are optimised with large rollers and improved internal geometry providing high load-carrying capacity and stiffness. They are available with ACSM. As a standard rail guides with ACSM are delivered without end face holes. LWRE rail guides of size 2 are equipped with ball cages.

Because of the large number of possible combinations, all components of LWRE rail guides must be ordered separately, for example:

4 rail guides LWRE
2 cross roller cages LWAKE
8 end stops LWERE

LWRE .. KIT

The KIT package for the modular range is a unique service provided only by SKF.

Rails

LWRE and LWRE ACS

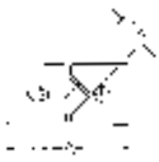

LWRE ACSM

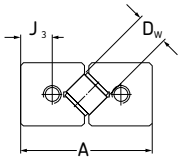

LWRB ACSM

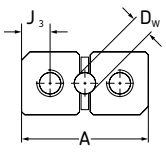

LWRE ACSM

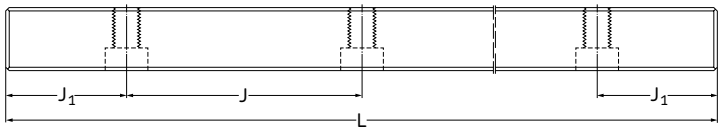

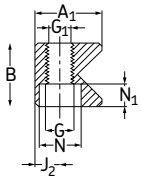

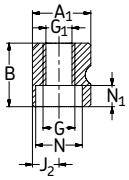

LWRE, LWRE ACSM

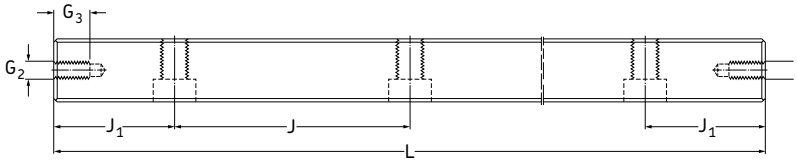

End stops

LWERE 3, 6, 9

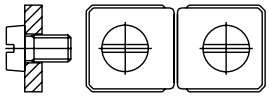

LWERE 4

Cross roller cages

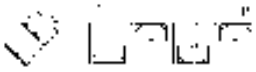

LWAKE 3, 6, 9

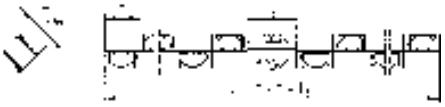

LWAKE 3, 6, 9 ACS

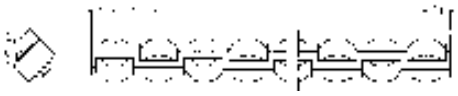

LWAKE 4

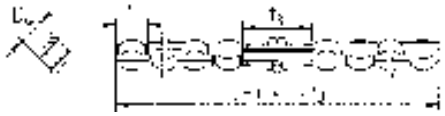

LWAKE 4 ACS

Special attachment screw

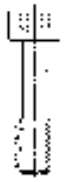

LWGD

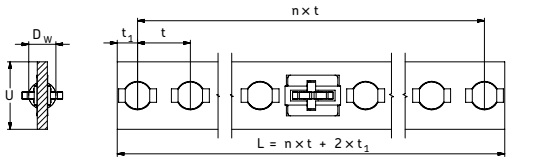

LWJK 2 ACSM

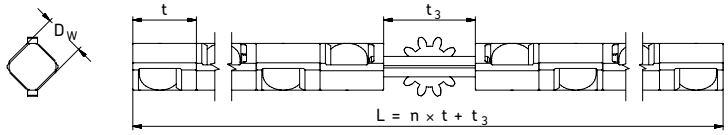

LWAKE 3, 6, 9 ACSM

2 Linear guides
Precision rail guides

LWRE 3/6 .. KIT

4 rail guides LWRE
2 cross roller LWAKE
8 end stops LWERE

Designations	Load ratings* dynamic	static	Stroke	Rail designations	Cage designations
	C	C_0			
	N		mm		
LWRE 3050 KIT	4 230	5 100	25	LWRE 3050	LWAKE 3×6
LWRE 3075 KIT	5 803	7 650	38	LWRE 3075	LWAKE 3×9
LWRE 3100 KIT	7 263	10 200	50	LWRE 3100	LWAKE 3×12
LWRE 3125 KIT	8 644	12 750	63	LWRE 3125	LWAKE 3×15
LWRE 3150 KIT	9 964	15 300	75	LWRE 3150	LWAKE 3×18
LWRE 3175 KIT	11 238	17 850	88	LWRE 3175	LWAKE 3×21
LWRE 3200 KIT	12 471	20 400	100	LWRE 3200	LWAKE 3×24

* Load ratings for 10 rolling elements
Including 8 end stops LWERE 3

See page 101 for drawing

Designations	Load ratings* dynamic	static	Stroke	Rail designations	Cage designations
	C	C_0			
	N		mm		
LWRE 6100 KIT	25 743	27 300	46	LWRE 6100	LWAKE 6×7
LWRE 6150 KIT	34 000	39 000	80	LWRE 6150	LWAKE 6×10
LWRE 6200 KIT	44 204	54 600	92	LWRE 6200	LWAKE 6×14
LWRE 6250 KIT	51 431	66 300	126	LWRE 6250	LWAKE 6×17
LWRE 6300 KIT	58 382	78 000	160	LWRE 6300	LWAKE 6×20
LWRE 6350 KIT	67 304	93 600	172	LWRE 6350	LWAKE 6×24
LWRE 6400 KIT	73 781	105 300	208	LWRE 6400	LWAKE 6×27

* Load ratings for 10 rolling elements
Including 8 end stops LWERE 6

See page 101 for drawing

LWRE 3/6.. ACS KIT

4 rail guides LWRE ACS
2 cross roller cages LWAKE
8 end stops LWERE

Designations	Load ratings* dynamic	static	Stroke	Rail designations	Cage designations
	C	C_0			
	N		mm		
LWRE 3050 ACS-KIT	4 230	5 100	20	LWRE 3050 ACS	LWAKE 3×6 ACS
LWRE 3075 ACS-KIT	5 294	6 800	30	LWRE 3075 ACS	LWAKE 3×6 ACS
LWRE 3100 ACS-KIT	6 300	8 500	45	LWRE 3100 ACS	LWAKE 3×10 ACS
LWRE 3125 ACS-KIT	7 731	11 050	62	LWRE 3125 ACS	LWAKE 3×13 ACS
LWRE 3150 ACS-KIT	9 090	13 600	79	LWRE 3150 ACS	LWAKE 3×16 ACS
LWRE 3175 ACS-KIT	9 964	15 300	94	LWRE 3175 ACS	LWAKE 3×18 ACS
LWRE 3200 ACS-KIT	11 653	18 700	100	LWRE 3200 ACS	LWAKE 3×22 ACS

* Load ratings for 10 rolling elements
Including 8 end stops LWERE 3

See page 101 for drawing

Designations	Load ratings* dynamic	static	Stroke	Rail designations	Cage designations
	C	C_0			
	N		mm		
LWRE 6100 ACS-KIT	22 826	23 400	37	LWRE 6100 ACS	LWAKE 6×6 ACS
LWRE 6150 ACS-KIT	31 318	35 100	71	LWRE 6150 ACS	LWAKE 6×9 ACS
LWRE 6200 ACS-KIT	39 196	46 800	105	LWRE 6200 ACS	LWAKE 6×12 ACS
LWRE 6250 ACS-KIT	49 056	62 400	117	LWRE 6250 ACS	LWAKE 6×16 ACS
LWRE 6300 ACS-KIT	56 093	74 100	151	LWRE 6300 ACS	LWAKE 6×19 ACS
LWRE 6350 ACS-KIT	65 107	89 700	163	LWRE 6350 ACS	LWAKE 6×23 ACS
LWRE 6400 ACS-KIT	71 640	101 400	197	LWRE 6400 ACS	LWAKE 6×26 ACS

* Load ratings for 10 rolling elements
Including 8 end stops LWERE 6

See page 101 for drawing

2 Linear guides
Precision rail guides

LWRE 3

Designations	Dimensions													Load ratings* dynamic	static
	A	B	L	L_1	J	J_1	G	G_1	N	N_1	A_1	D_W	t	C	C_0
	mm						–	mm						N	
Rails															
LWRE 3050	18	8	50		25	12,5	M4	3,3	6	3,2	8,7				
LWRE 3075	18	8	75		25	12,5	M4	3,3	6	3,2	8,7				
LWRE 3100	18	8	100		25	12,5	M4	3,3	6	3,2	8,7				
LWRE 3125	18	8	125		25	12,5	M4	3,3	6	3,2	8,7				
LWRE 3150	18	8	150		25	12,5	M4	3,3	6	3,2	8,7				
LWRE 3175	18	8	175		25	12,5	M4	3,3	6	3,2	8,7				
LWRE 3200	18	8	200		25	12,5	M4	3,3	6	3,2	8,7				
Cross roller cage															
LWAKE 3												4	6,25	6 300	8 500
End stop															
LWERE 3			2	–											
Special attachment screw															
LWGD 3															

See page 101
for drawing

* Load ratings for 10 rolling elements

LWRE 2211

Designations	Dimensions															Load ratings* dynamic	static
	A	B	L	L_1	J	J_1	G	G_1	N	N_1	A_1	D_W	t	t_1	t_2	C	C_0
	mm						–	mm								N	
Rails																	
LWRE 22110080	22	11	80		40	20	M5	4,3	7,5	4,1	11			2,65	3,6		
LWRE 22110120	22	11	120		40	20	M5	4,3	7,5	4,1	11			2,65	3,6		
LWRE 22110160	22	11	160		40	20	M5	4,3	7,5	4,1	11			2,65	3,6		
LWRE 22110200	22	11	200		40	20	M5	4,3	7,5	4,1	11			2,65	3,6		
LWRE 22110240	22	11	240		40	20	M5	4,3	7,5	4,1	11			2,65	3,6		
LWRE 22110280	22	11	280		40	20	M5	4,3	7,5	4,1	11			2,65	3,6		
LWRE 22110320	22	11	320		40	20	M5	4,3	7,5	4,1	11			2,65	3,6		
LWRE 22110360	22	11	360		40	20	M5	4,3	7,5	4,1	11			2,65	3,6		
LWRE 22110400	22	11	400		40	20	M5	4,3	7,5	4,1	11			2,65	3,6		
Cross roller cage																	
LWAKE 3												4	6,25			6 300	8 500
End stop																	
LWERE 3			2	–													

See page 101
for drawing

* Load ratings for 10 rolling elements

LWRE 6

Designations	Dimensions													Load ratings* dynamic	static
	A	B	L	L_1	J	J_1	G	G_1	N	N_1	A_1	D_W	t	C	C_0
	mm						–	mm						N	
Rails															
LWRE 6100	31	15	100		50	25	M6	5,2	9,5	5,2	15				
LWRE 6150	31	15	150		50	25	M6	5,2	9,5	5,2	15				
LWRE 6200	31	15	200		50	25	M6	5,2	9,5	5,2	15				
LWRE 6250	31	15	250		50	25	M6	5,2	9,5	5,2	15				
LWRE 6300	31	15	300		50	25	M6	5,2	9,5	5,2	15				
LWRE 6400	31	15	400		50	25	M6	5,2	9,5	5,2	15				
Cross roller cage															
LWAKE 6												8	11	34 000	39 000
End stop															
LWERE 6			3	–											
Special attachment screw															
LWGD 6															

See page 101 for drawing

* Load ratings for 10 rolling elements

LWRE 9

Designations	Dimensions													Load ratings* dynamic	static
	A	B	L	L_1	J	J_1	G	G_1	N	N_1	A_1	D_W	t	C	C_0
	mm						–	mm						N	
Rails															
LWRE 90200	44	22	200		100	50	M8	6,8	11	6,2	22				
LWRE 90300	44	22	300		100	50	M8	6,8	11	6,2	22				
LWRE 90400	44	22	400		100	50	M8	6,8	11	6,2	22				
LWRE 90500	44	22	500		100	50	M8	6,8	11	6,2	22				
LWRE 90600	44	22	600		100	50	M8	6,8	11	6,2	22				
LWRE 90700	44	22	700		100	50	M8	6,8	11	6,2	22				
Cross roller cage															
LWAKE 9												12	16	78 000	78 000
End stop															
LWERE 9			3	–											
Special attachment screw															
LWGD 9															

See page 101 for drawing

* Load ratings for 10 rolling elements

2 Linear guides
Precision rail guides

LWRB 2 .. ACSM and LWRE 3/6/9 .. ACSM

Designations	Dimensions			Attachment holes					End face holes					
	A	B	A_1	D_W	J	J_1	J_2	G	G_1	N	N_1	J_3	G_2	G_3
	mm							–	mm				–	mm
LWRB 2 ACSM	12	6	5,5	2	15	7,5	2,5	M3	2,55	4,4	2	2,7	M2,5	3
LWRE 3 ACSM	18	8	8,7	4	25	12,5	3,5	M4	3,3	6	3,2	4	M3	6
LWRE 6 ACSM	31	15	15,2	8	50	25	6	M6	5,2	9,5	5,2	6,75	M5	9
LWRE 9 ACSM	44	22	21,7	12	100	50	9	M8	6,8	10,5	6,2	9,75	M6	9

See page 101 for drawing

LWJK 2 and LWAKE 3/6/9 ACSM

Designations	Dimensions			Load ratings* dynamic	static	Suitable rail guide
	D_W	t	t_3	C	C_0	
	mm			N		
LWJK 2 ACSM	2	3,9	3,9	510	650	LWRB 2 ACSM
LWAKE 3 ACSM	4	6,25	9	5 040	8 160	LWRE 3 ACSM
LWAKE 6 ACSM	8	11	15,3	27 200	37 440	LWRE 6 ACSM
LWAKE 9 ACSM	12	16	22	62 400	74 880	LWRE 9 ACSM

* Load ratings for 10 rolling elements per row

See page 101 for drawing

LWRE 3 .. ACSM KIT

4 rail guides LWRE ACSM
2 cross roller LWAKE ACSM

Designations	Load ratings* dynamic	static	Stroke	Rail designations	Cage designations
	C	C_0		4 pieces	2 pieces
	N		mm		
LWRE 3050 ACSM-KIT	2 940	4 080	20	LWRE 3050 ACSM	LWAKE 3×5 ACSM
LWRE 3075 ACSM-KIT	3 380	4 900	30	LWRE 3075 ACSM	LWAKE 3×6 ACSM
LWRE 3100 ACSM-KIT	5 040	8 160	45	LWRE 3100 ACSM	LWAKE 3×10 ACSM
LWRE 3125 ACSM-KIT	6 180	10 610	62	LWRE 3125 ACSM	LWAKE 3×13 ACSM
LWRE 3150 ACSM-KIT	7 270	13 060	79	LWRE 3150 ACSM	LWAKE 3×16 ACSM
LWRE 3175 ACSM-KIT	7 970	14 690	94	LWRE 3175 ACSM	LWAKE 3×18 ACSM

* Load ratings for 10 rolling elements per row

See page 101 for drawing

LWRE 6 .. ACSM KIT

Designations	Load ratings* dynamic	static	Stroke	Rail designations	Cage designations
	C	C_0			
	N		mm		
LWRE 6100 ACSM-KIT	18 260	22 460	37	LWRE 6100 ACSM	LWAKE 6×6 ACSM
LWRE 6150 ACSM-KIT	25 050	33 700	71	LWRE 6150 ACSM	LWAKE 6×9 ACSM
LWRE 6200 ACSM-KIT	31 360	44 930	105	LWRE 6200 ACSM	LWAKE 6×12 ACSM
LWRE 6250 ACSM-KIT	39 240	59 900	117	LWRE 6250 ACSM	LWAKE 6×16 ACSM
LWRE 6300 ACSM-KIT	44 870	71 140	151	LWRE 6300 ACSM	LWAKE 6×19 ACSM
LWRE 6350 ACSM-KIT	52 090	86 110	163	LWRE 6350 ACSM	LWAKE 6×23 ACSM
LWRE 6400 ACSM-KIT	57 310	97 340	197	LWRE 6400 ACSM	LWAKE 6×26 ACSM

* Load ratings for 10 rolling elements per row

See page 101 for drawing

2 Linear guides
Precision rail guides

LWRE 3 ACS

Designations	Dimensions													Load ratings* dynamic	static
	A	B	L	L_1	J	J_1	G	G_1	N	N_1	A_1	D_W	t	t_3	C	C_0
	mm						–	mm							N	
Rails																
LWRE 3050 ACS	18	8	50		25	12,5	M4	3,3	6	3,2	8,7			9		
LWRE 3075 ACS	18	8	75		25	12,5	M4	3,3	6	3,2	8,7			9		
LWRE 3100 ACS	18	8	100		25	12,5	M4	3,3	6	3,2	8,7			9		
LWRE 3125 ACS	18	8	125		25	12,5	M4	3,3	6	3,2	8,7			9		
LWRE 3150 ACS	18	8	150		25	12,5	M4	3,3	6	3,2	8,7			9		
LWRE 3175 ACS	18	8	175		25	12,5	M4	3,3	6	3,2	8,7			9		
LWRE 3200 ACS	18	8	200		25	12,5	M4	3,3	6	3,2	8,7			9		
Cross roller cage																
LWAKE 3 ACS												4	6,25		6 300	8 500
End stop																
LWERE 3			2	–												
Special attachment screw																
LWGD 3																

See page 101
for drawing

* Load ratings for 10 rolling elements

LWRE 2211 ACS

Designations	Dimensions												Load ratings* dynamic	static
	A	B	L	J	J_1	G	G_1	N	N_1	A_1	D_W	t	t_3	C	C_0
	mm					–	mm							N	
Rails															
LWRE 22110080 ACS	22	11	80	40	20	M5	4,3	7,5	4,1	11			9		
LWRE 22110120 ACS	22	11	120	40	20	M5	4,3	7,5	4,1	11			9		
LWRE 22110160 ACS	22	11	160	40	20	M5	4,3	7,5	4,1	11			9		
LWRE 22110200 ACS	22	11	200	40	20	M5	4,3	7,5	4,1	11			9		
LWRE 22110240 ACS	22	11	240	40	20	M5	4,3	7,5	4,1	11			9		
LWRE 22110280 ACS	22	11	280	40	20	M5	4,3	7,5	4,1	11			9		
LWRE 22110320 ACS	22	11	320	40	20	M5	4,3	7,5	4,1	11			9		
LWRE 22110360 ACS	22	11	360	40	20	M5	4,3	7,5	4,1	11			9		
LWRE 22110400 ACS	22	11	400	40	20	M5	4,3	7,5	4,1	11			9		
Cross roller cage															
LWAKE 3 ACS											4	6,25		6 300	8 500
End stop															
LWERE 3															

See page 101
for drawing

* Load ratings for 10 rolling elements

LWRE 6 ACS

Designations	Dimensions														Load ratings* dynamic	static
	A	B	L	L_1	J	J_1	G	G_1	N	N_1	A_1	D_W	t	t_3	C	C_0
	mm						–	mm							N	
Rails																
LWRE 6100 ACS	31	15	100		50	25	M6	5,2	9,5	5,2	15			15,3		
LWRE 6150 ACS	31	15	150		50	25	M6	5,2	9,5	5,2	15			15,3		
LWRE 6200 ACS	31	15	200		50	25	M6	5,2	9,5	5,2	15			15,3		
LWRE 6250 ACS	31	15	250		50	25	M6	5,2	9,5	5,2	15			15,3		
LWRE 6300 ACS	31	15	300		50	25	M6	5,2	9,5	5,2	15			15,3		
LWRE 6400 ACS	31	15	400		50	25	M6	5,2	9,5	5,2	15			15,3		
Cross roller cage																
LWAKE 6 ACS												8	11		34 000	39 000
End stop																
LWERE 6			3	–												
Special attachment screw																
LWGD 6																

See page 101
for drawing

* Load ratings for 10 rolling elements

LWRE 9 ACS

Designations	Dimensions														Load ratings* dynamic	static
	A	B	L	L_1	J	J_1	G	G_1	N	N_1	A_1	D_W	t	t_3	C	C_0
	mm						–	mm							N	
Rails																
LWRE 90200 ACS	44	22	200		100	50	M8	6,8	11	6,2	22			22		
LWRE 90300 ACS	44	22	300		100	50	M8	6,8	11	6,2	22			22		
LWRE 90400 ACS	44	22	400		100	50	M8	6,8	11	6,2	22			22		
LWRE 90500 ACS	44	22	500		100	50	M8	6,8	11	6,2	22			22		
LWRE 90600 ACS	44	22	600		100	50	M8	6,8	11	6,2	22			22		
LWRE 90700 ACS	44	22	700		100	50	M8	6,8	11	6,2	22			22		
Cross roller cage																
LWAKE 9 ACS												12	16		78 000	78 000
End stop																
LWERE 9			3	–												
Special attachment screw																
LWGD 9																

See page 101
for drawing

* Load ratings for 10 rolling elements

2 Linear guides
Precision rail guides

LWRM .. / LWRV ..
Guiding systems with high load carrying capacity and maximum stiffness.

Needle roller cages for LWRM/LWRV rail guides
LWHW needle roller cages are made out of aluminium which provide retention of the needle rollers. They are available for size 6 and 9 units.

When ordering, the appropriate cage length in mm must be stated after the cage designation, e. g: LWHW 10 × 225.

End stops for LWRM/LWRV rail guides.

End stops serve to restrict the drift of the needle roller cage from the loaded zone.

LWEARM and LWEARV end stops are fitted with a plastic wiper with a sealing lip serving to reduce the risk of contamination of the raceways.

All end stops are supplied with the necessary attachment screws.

The mounting and attachment dimensions of the LWRM/LWRV rail guides conform to those of the other SKF modular range rail guides included in this catalogue.

Because of the large number of possible combinations, all components of LWRM/ LWRV rail guides must be ordered separately, for example:

2 rail guides LWRM
2 rail guides LWRV
2 needle roller assemblies LWHW
4 end stops LWEARM.

Rails

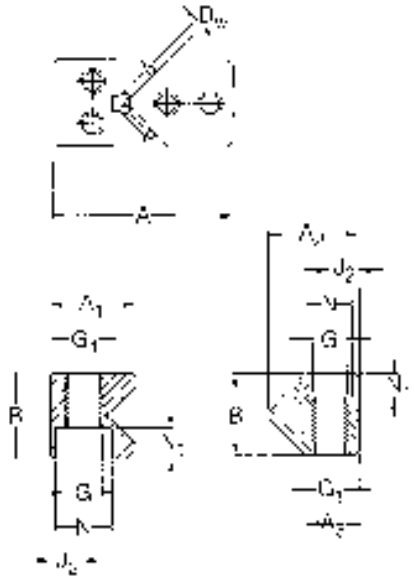

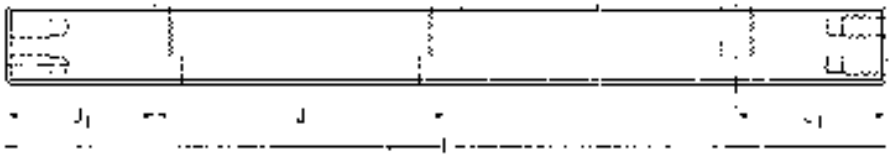

LWRM

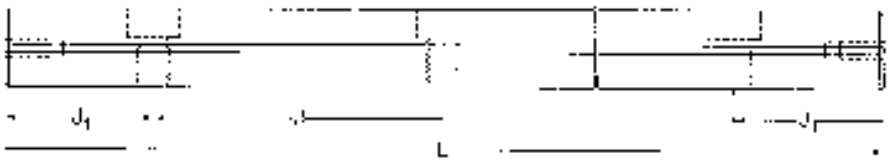

LWRV

End stops

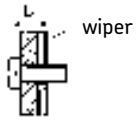

LWEARV
with wiper

LWEARM
with wiper

Needle roller cage

LWHW Aluminium

Special attachment screw

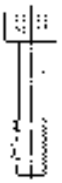

LWGD

LWRM 6 / LWRV 6

Designations	Dimensions															Load ratings* dynamic	static
	A	B	L	L_1	J	J_1	G	G_1	N	N_1	A_1	A_2	A_3	D_W	U	t	C	C_0
	mm						–	mm									N	
Rails																		
LWRM/LWRV 6100	31	15	100		50	25	M6	5,2	9,5	5,2	17	18	11					
LWRM/LWRV 6150	31	15	150		50	25	M6	5,2	9,5	5,2	17	18	11					
LWRM/LWRV 6200	31	15	200		50	25	M6	5,2	9,5	5,2	17	18	11					
LWRM/LWRV 6250	31	15	250		50	25	M6	5,2	9,5	5,2	17	18	11					
LWRM/LWRV 6300	31	15	300		50	25	M6	5,2	9,5	5,2	17	18	11					
LWRM/LWRV 6400	31	15	400		50	25	M6	5,2	9,5	5,2	17	18	11					
Needle roller cage																		
LWHW 10														2	10	3,75	10 400	25 500
End stops																		
LWEARM 6			–	6														
LWEARV 6			–	6														
Special attachment screw																		
LWGD 6																		

See page 110 for drawing

* For 10 needle rollers per row

LWRM 9 / LWRV 9

Designations	Dimensions															Load ratings* dynamic	static
	A	B	L	L_1	J	J_1	G	G_1	N	N_1	A_1	A_2	A_3	D_W	U	t	C	C_0
	mm						–	mm									N	
Rails																		
LWRM/LWRV 90200	44	22	200		100	50	M8	6,8	11	6,2	23,1	27	17					
LWRM/LWRV 90300	44	22	300		100	50	M8	6,8	11	6,2	23,1	27	17					
LWRM/LWRV 90400	44	22	400		100	50	M8	6,8	11	6,2	23,1	27	17					
LWRM/LWRV 90500	44	22	500		100	50	M8	6,8	11	6,2	23,1	27	17					
Needle roller cage																		
LWHW 15														2	15	4,5	16 300	45 000
End stops																		
LWEARM 9			–	8,3														
LWEARV 9			–	8,3														
Special attachment screw																		
LWGD 9																		

See page 110 for drawing

* For 10 needle rollers per row

2 Linear guides
Precision rail guides

LWM .. / LWV ..
These rail guides enable the design of linear guiding systems for heavy loads with maximum stiffness. The internal geometry is identical with that of the modular range rails of the LWRM/LWRV series. As the same needle roller cage is used, the load bearing characteristics are identical. The external dimensions of the LWM/LWV rail guides, however, differ slightly from those of the LWRM/LWRV modular range dimensions.

LWM/LWV rail guides are widely used in machine tools. LWM/LWV rail guides have as standard an attachment hole type 15, i.e. through hole with countersinking.

If attachment hole type 13 is ordered, corresponding threaded inserts are supplied along with the guide.

For new designs, LWRM/LWRV rail guides are recommended. These offer the advantage of being interchangeable with other rail guides of the modular range.

Needle roller cages for LWM/LWV rail guides
LWHW needle roller cages comprise an aluminium cage with needle rollers arranged at right angles to each other. The needle rollers are retained by the cage.

End stops for LWM/LWV rail guides
LWEAM and LWEAV end stops are fitted with a plastic wiper with sealing lip which serves to keep the track free from dirt.

All end pieces are supplied together with attachment screws.

Rails

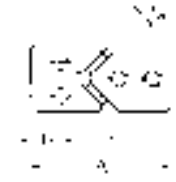

Hole type 13

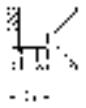

Hole type 13

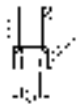

Hole type 15

LWM rail

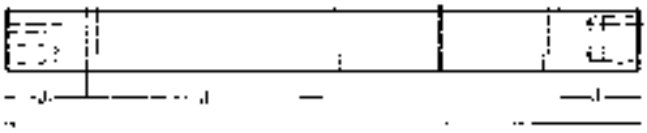

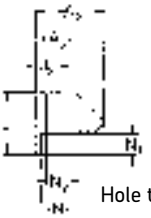

Hole type 15

LWV rail

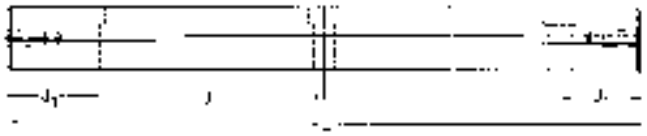

End stops

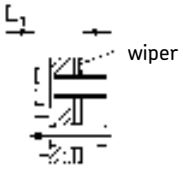

LWEAM with wiper

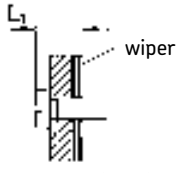

LWEAV with wiper

Needle roller cage

LWHW Aluminium

Special attachment screw

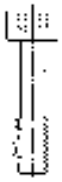

LWGD

LWM 3015 / LWV 3015

Designations	Dimensions															Load ratings* dynamic	static
	A	B	L	L_1	$J^{1)}$	$J_{1min}{}^{2)}$	G	N	N_1	N_2	A_1	A_2	A_3	D_W	U	t	C	C_0
	mm						–	mm									N	
Rails																		
LWM/LWV 3015100	30	15	100		40	15	M4	8,5	4,5	5,25	16	17,2	10,5					
LWM/LWV 3015150	30	15	150		40	15	M4	8,5	4,5	5,25	16	17,2	10,5					
LWM/LWV 3015200	30	15	200		40	15	M4	8,5	4,5	5,25	16	17,2	10,5					
LWM/LWV 3015300	30	15	300		40	15	M4	8,5	4,5	5,25	16	17,2	10,5					
LWM/LWV 3015400	30	15	400		40	15	M4	8,5	4,5	5,25	16	17,2	10,5					
Needle roller cage																		
LWHW10														2	10	3,75	10 400	25 500
End stops																		
LWEAM 3015			–	6														
LWEAV 3015			–	6														
Appropriate attachment screw																		
M4 DIN 84																		

* For 10 needle rollers per row
[1] For lengths $L < J + 2 - J_{1min}$, J = 50 mm (except for LWM/LWV 3015)
[2] J_1 depends upon the rail length and is of the same size at each end of the rail: $J_1 = (L - \Sigma J)/2$

See page 112 for drawing

LWM 4020 / LWV 4020

Designations	Dimensions															Load ratings* dynamic	static
	A	B	L	L_1	$J^{1)}$	$J_{1min}{}^{2)}$	G	N	N_1	N_2	A_1	A_2	A_3	D_W	U	t	C	C_0
	mm						–	mm									N	
Rails																		
LWM/LWV 4020100	40	20	100		80	15	M6	11,5	6,8	7,5	22,3	22	13,5					
LWM/LWV 4020150	40	20	150		80	15	M6	11,5	6,8	7,5	22,3	22	13,5					
LWM/LWV 4020200	40	20	200		80	15	M6	11,5	6,8	7,5	22,3	22	13,5					
LWM/LWV 4020300	40	20	300		80	15	M6	11,5	6,8	7,5	22,3	22	13,5					
LWM/LWV 4020400	40	20	400		80	15	M6	11,5	6,8	7,5	22,3	22	13,5					
Needle roller cage																		
LWHW 15														2	15	4,5	16 300	45 000
End stops																		
LWEAM 4020			–	8,3														
LWEAV 4020			–	8,3														
Appropriate attachment screw																		
M6 DIN 84																		

* For 10 needle rollers per row
[1] For lengths $L < J + 2 - J_{1min}$, J = 50 mm (except for LWM/LWV 3015)
[2] J_1 depends upon the rail length and is of the same size at each end of the rail: $J_1 = (L - \Sigma J)/2$

See page 112 for drawing

2 Linear guides
Precision rail guides

LWM 5025 / LWV 5025

Designations	Dimensions															Load ratings* dynamic	static
	A	B	L	L_1	$J^{1)}$	$J_{1min}{}^{2)}$	G	N	N_1	N_2	A_1	A_2	A_3	D_W	U	t	C	C_0
	mm						–	mm									N	
Rails																		
LWM/LWV 50250100	50	25	100		80	20	M6	11,5	6,8	7,5	28	28	17					
LWM/LWV 50250200	50	25	200		80	20	M6	11,5	6,8	7,5	28	28	17					
LWM/LWV 50250300	50	25	300		80	20	M6	11,5	6,8	7,5	28	28	17					
LWM/LWV 50250400	50	25	400		80	20	M6	11,5	6,8	7,5	28	28	17					
LWM/LWV 50250500	50	25	500		80	20	M6	11,5	6,8	7,5	28	28	17					
Needle roller cage																		
LWHW 15														2	15	4,5	16 300	45 000
End stops																		
LWEAM 5025			–	8,9														
LWEAV 5025			–	8,9														
Appropriate attachment screw																		
M6 DIN 84																		

* For 10 needle rollers per row
[1] For lengths L < J + 2 – J_{1min}, J = 50 mm (except for LWM/LWV 3015)
[2] J_1 depends upon the rail length and is of the same size at each end of the rail: $J_1 = (L - \Sigma J)/2$

See page 112
for drawing

LWM 6035 / LWV 6035

Designations	Dimensions															Load ratings* dynamic	static
	A	B	L	L_1	$J^{1)}$	$J_{1min}{}^{2)}$	G	N	N_1	N_2	A_1	A_2	A_3	D_W	U	t	C	C_0
	mm						–	mm									N	
Rails																		
LWM/LWV 60350200	60	35	200		100	20	M8	15	9	10	36	36	20					
LWM/LWV 60350300	60	35	300		100	20	M8	15	9	10	36	36	20					
LWM/LWV 60350400	60	35	400		100	20	M8	15	9	10	36	36	20					
LWM/LWV 60350500	60	35	500		100	20	M8	15	9	10	36	36	20					
LWM/LWV 60350600	60	35	600		100	20	M8	15	9	10	36	36	20					
LWM/LWV 60350700	60	35	700		100	20	M8	15	9	10	36	36	20					
LWM/LWV 60350800	60	35	800		100	20	M8	15	9	10	36	36	20					
LWM/LWV 60350900	60	35	900		100	20	M8	15	9	10	36	36	20					
LWM/LWV 60351000	60	35	1 000		100	20	M8	15	9	10	36	36	20					
Needle roller cage																		
LWHW 20														2,5	20	5,5	32 000	88 000
End stops																		
LWEAM 6035			–	8,9														
LWEAV 6035			–	8,9														
Appropriate attachment screw																		
M8 DIN 84																		

* For 10 needle rollers per row
[1] For lengths L < J + 2 – J_{1min}, J = 50 mm (except for LWM/LWV 3015)
[2] J_1 depends upon the rail length and is of the same size at each end of the rail: $J_1 = (L - \Sigma J)/2$

See page 112
for drawing

LWM 7040 / LWV 7040

Designations	Dimensions															Load ratings* dynamic	static
	A	B	L	L_1	$J^{1)}$	$J_{1min}^{2)}$	G	N	N_1	N_2	A_1	A_2	A_3	D_W	U	t	C	C_0
	mm						–	mm									N	
Rails																		
LWM/LWV 70400200	70	40	200		100	20	M10	18,5	11	12,5	40	42	24					
LWM/LWV 70400300	70	40	300		100	20	M10	18,5	11	12,5	40	42	24					
LWM/LWV 70400400	70	40	400		100	20	M10	18,5	11	12,5	40	42	24					
LWM/LWV 70400500	70	40	500		100	20	M10	18,5	11	12,5	40	42	24					
LWM/LWV 70400600	70	40	600		100	20	M10	18,5	11	12,5	40	42	24					
LWM/LWV 70400700	70	40	700		100	20	M10	18,5	11	12,5	40	42	24					
LWM/LWV 70400800	70	40	800		100	20	M10	18,5	11	12,5	40	42	24					
LWM/LWV 70400900	70	40	900		100	20	M10	18,5	11	12,5	40	42	24					
LWM/LWV 70401000	70	40	1 000		100	20	M10	18,5	11	12,5	40	42	24					
Needle roller cage																		
LWHW 25														3	25	6	52 000	143 000
End stops																		
LWEAM 7040			–	8,9														
LWEAV 7040			–	8,9														
Appropriate attachment screw																		
M10 DIN 84																		

* For 10 needle rollers per row
1) For lengths $L < J + 2 - J_{1min}$, J = 50 mm (except for LWM/LWV 3015)
2) J_1 depends upon the rail length and is of the same size at each end of the rail: $J_1 = (L - \Sigma J)/2$

See page 112 for drawing

LWM 8050 / LWV 8050

Designations	Dimensions															Load ratings* dynamic	static
	A	B	L	L_1	$J^{1)}$	$J_{1min}^{2)}$	G	N	N_1	N_2	A_1	A_2	A_3	D_W	U	t	C	C_0
	mm						–	mm									N	
Rails																		
LWM/LWV 80500200	80	50	200		100	20	M12	20	13	14	45	48,5	26					
LWM/LWV 80500300	80	50	300		100	20	M12	20	13	14	45	48,5	26					
LWM/LWV 80500400	80	50	400		100	20	M12	20	13	14	45	48,5	26					
LWM/LWV 80500500	80	50	500		100	20	M12	20	13	14	45	48,5	26					
LWM/LWV 80500600	80	50	600		100	20	M12	20	13	14	45	48,5	26					
LWM/LWV 80500700	80	50	700		100	20	M12	20	13	14	45	48,5	26					
LWM/LWV 80500800	80	50	800		100	20	M12	20	13	14	45	48,5	26					
LWM/LWV 80500900	80	50	900		100	20	M12	20	13	14	45	48,5	26					
LWM/LWV 80501000	80	50	1 000		100	20	M12	20	13	14	45	48,5	26					
Needle roller cage																		
LWHW 30														3,5	30	7	76 500	212 000
End stops																		
LWEAM 8050			–	8,9														
LWEAV 8050			–	8,9														
Appropriate attachment screw																		
M12 DIN 84																		

* For 10 needle rollers per row
1) For lengths $L < J + 2 - J_{1min}$, J = 50 mm (except for LWM/LWV 3015)
2) J_1 depends upon the rail length and is of the same size at each end of the rail: $J_1 = (L - \Sigma J)/2$

See page 112 for drawing

2 Linear guides
Precision rail guides

LWRPM ../LWRPV ..

LWRPM/LWRPV rail guides are linear guides for limited travel, fitted with Turcite-B® [1] slide liners. Based on PTFE, this material is self-lubricating and offers excellent sliding properties.

The slide liners are bonded to the nonhardened LWRPM rail and subsequently ground to size. The LWRPV rail is hardened and ground. In order to avoid damage to the slide surface of the LWRPM rail, the leading edges of the LWRPV rails are slightly rounded. Otherwise, the dimensions of these rails are the same as those of the LWRV series.

LWRPM/LWRPV rail guides should be used where rail guides with rolling element assemblies are unsuitable due to external influences. Such applications include those subjected to high transverse acceleration that may cause indentation of the rolling elements in the raceways, or where extremely short strokes are required. The unfavourable tribological conditions produced by such operation would give rise to race-way pitting in a rolling element rail guide.

The mounting and attachment dimensions of the LWRPM/LWRPV rail guides conform to those of all the SKF Modular Range rail guides included in this catalogue. LWRPM/LWRPV rail guides are characterised by:

- stick-slip-free operation
- smooth running
- good emergency running properties
- low wear and high reliability
- insensitivity to contamination
- excellent vibration damping properties

When ordering, the individual components of the rail guides must be specified separately, for example:

2 rails LWRPM 6300
2 rails LWRPV 6300

LWRPM rail guides are provided with the slide liners already bonded to the raceways. Due to their design rail guides of these series do not require the use of end stops. Seperate ordering of the slide liners and end stops is not required.

[1] Turcite-B® is a registered trademark of Busak & Shamban GmbH

Rails

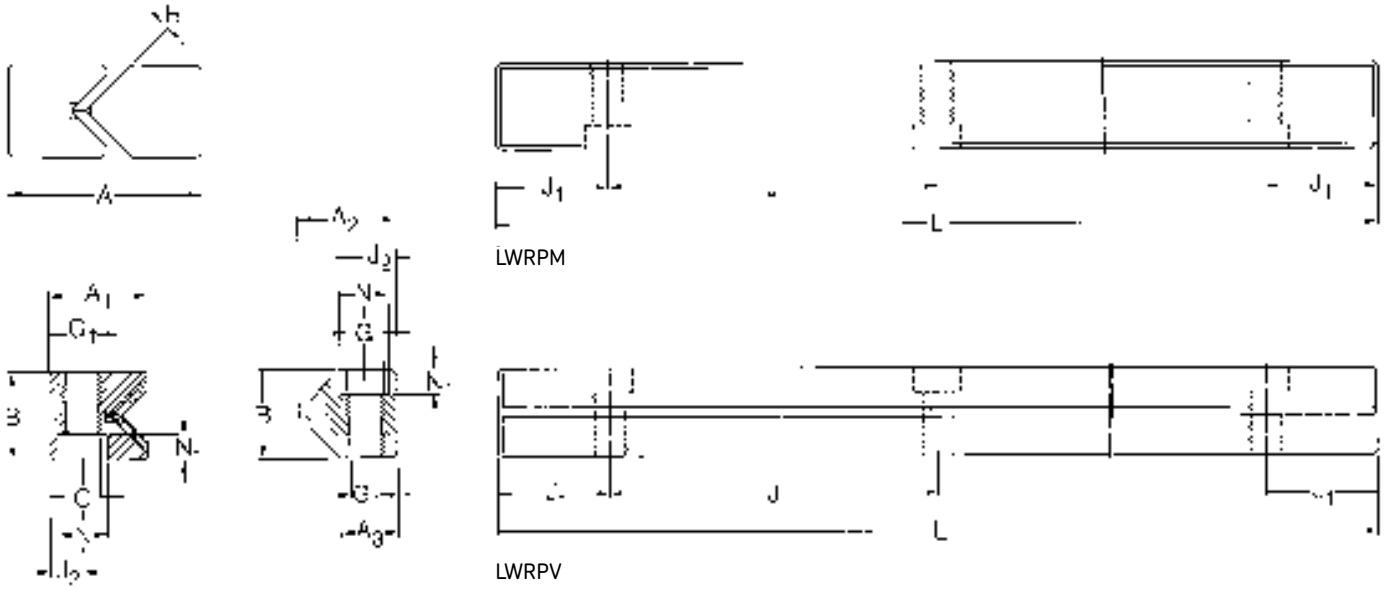

LWRPM 3/6/9

Designations	Dimensions												Load ratings* dynamic
	A	B	A_1	A_2	A_3	J	J_1	J_2	G	G_3	N	N_1	C
	mm								–	mm			N
Rails													
LWRPM 3	18	8	9,5	–	–	25	12,5	3,5	M4	3,3	6	3,2	300/100 mm
LWRPM 6	31	15	16,6	–	–	50	25	6	M6	5,2	9,5	5,2	700/100 mm
LWRPM 9	44	22	23,1	–	–	100	50	9	M8	6,8	10,5	6,2	1 200/100 mm

See page 116 for drawing

* For a surface loading of approximately 1 N/mm^2 (momentary loads of up to 6 N/mm^2 are permissible).

LWRPV 3/6/9

Designations	Dimensions												Load ratings* dynamic
	A	B	A_1	A_2	A_3	J	J_1	J_2	G	G_3	N	N_1	C
	mm								–	mm			N
Rails													
LWRPV 3	18	8	–	9,6	6,45	25	12,5	3,5	M4	3,3	6	3,2	–
LWRPV 6	31	15	–	17,8	10,8	50	25	6	M6	5,2	9,5	5,2	–
LWRPV 9	44	22	–	26,9	16,6	100	50	9	M8	6,8	10,5	6,2	–

See page 116 for drawing

* For a surface loading of approximately 1 N/mm^2 (momentary loads of up to 6 N/mm^2 are permissible).

Applications

In response to our customer's ultimate need to produce more with less, SKF has combined its knowledge and experience with the latest technology to develop solutions for your specific conditions. Whether your goal is to design equipment that provides more customer value, or to increase overall profitability, with SKF experience and expertise, you're likely to find a real solution.

Linear motor table

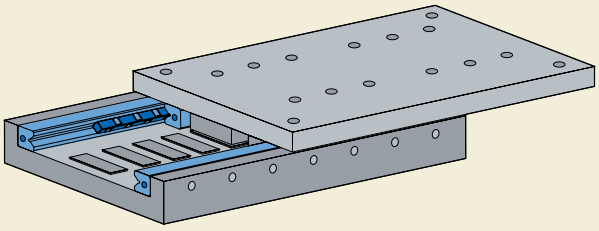

Components application
a) Precision rail guides

Gantry systems

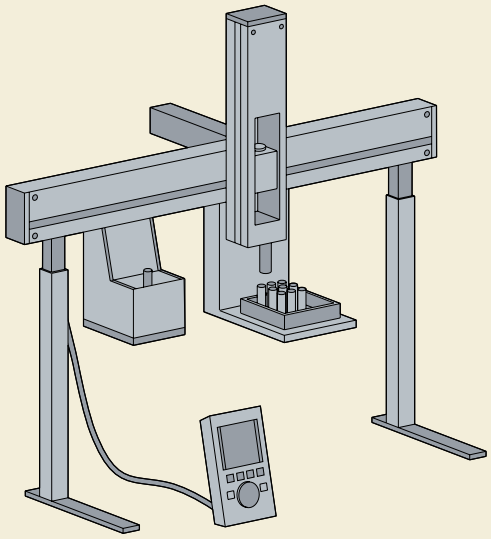

Components application
a) Precision rail guides

Machine tool

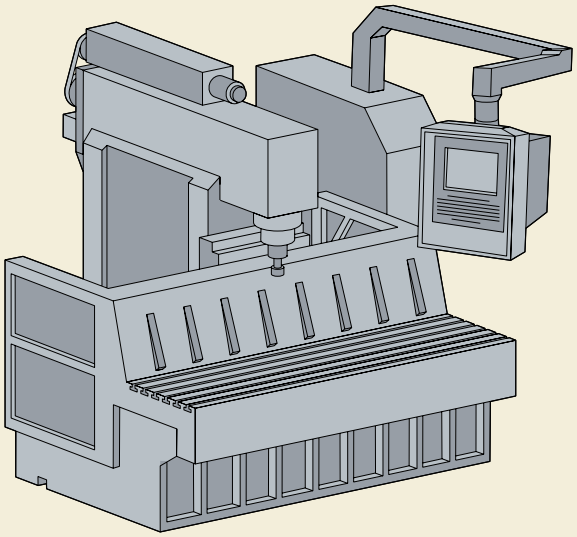

Components application
a) Precision rail guides

Stone/glass cutting

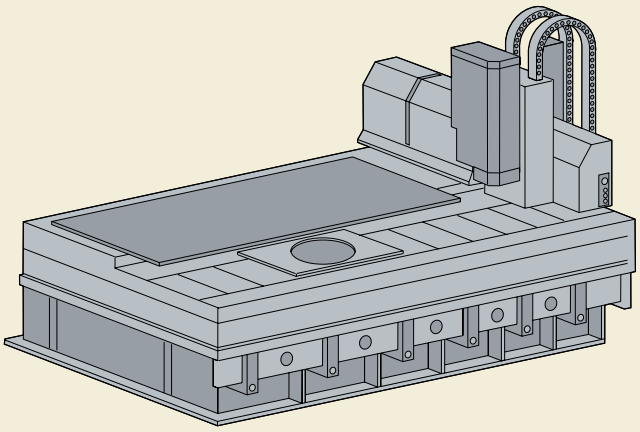

Components application
a) Precision rail guides

Notes

sale@technobearing.ru www.technobearing.ru 8 (800) 700-72-07 (звонок бесплатный)

Some things are made to withstand the test of time

The thread of a cobweb is proportionally more resistant than any material ever invented by man – even a steel cable. Here we see just one of the wonders of nature which have inspired SKF to develop products that will last for many years to come.

Some screws, guidance systems and many other components bearing the name of SKF are made from stainless steel and are designed to withstand a corrosive environment, at the same time providing the highest quality of performance with long-term reliability for all your applications.

With SKF, technology lasts.

Ball & roller screws

Ball screws and roller screws

SKF ball and roller screw assemblies are high-quality products, suitable for a wide range of applications where such screws are needed.

The high efficiency screw allows loads to be displaced by transforming rotary action into linear motion. The high efficiency screw has rolling elements, either balls or rollers, between the nut and the screw shaft.

In all types of ball screws – miniature, rolled and ground ball screws (**figs. 1, 2** and **3**) – the load is transmitted from the screw shaft to the nut through each ball. Several recirculating systems are available. To improve positioning accuracy, backlash can be reduced or eliminated.

Roller screws (**fig. 4**) are available in two non-competing designs which cover requirements beyond ball screw limitations.

Load transfer from the nut to the screw shaft through a number of threaded or grooved rollers results in a large number of strong contact points.

Fig. 1

Fig. 2

Fig. 3

Fig. 4

Operating precision (table 1)

Comparison of the different positioning components and systems is shown below .

Table 1

Operating precision (µm)	Linear guides				Ball & roller screws			Tables: driven and not driven
0,1-1		Precision rail guides		Standard slides	Roller screws	Ball screws	Linear motors	Standard drives or linear motors with all guiding systems
1-10	Linear ball bearings		Profile rail guides					
10-100								
100-1 000								

3 Ball & roller screws
Ball and roller screw

How to choose

In our wide range of products, you are sure to find the product that exactly fits your requirements:

- Miniature precision rolled ball screws (**fig. 5**), either with ball recirculation by integrated tube or with inserts, are very compact.
- Precision rolled ball screws (**fig. 6**) enable you to select the correct specifications: simple transport screws, very fast screws with long lead, or preloaded screws for more precision.
- Ground ball screws (**fig. 3**) for more rigidity and precision.
- Roller screws (**fig. 7**) and inverted roller screws (**fig. 8**) which provide strength far beyond the limits of ball screws for use in heavy loads, ultimate precision and rigidity, high speed and acceleration, and for use in very difficult environments.

Table 2 will help you make your selection.

Fig. 5

Fig. 6

Fig. 7

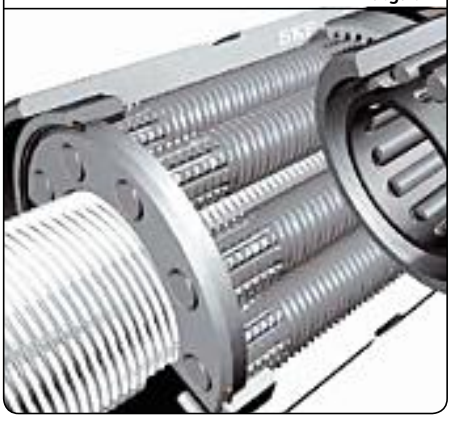

Fig. 8

Table 2

Type	Details	Basic dynamic load rating	Precision Ep (µ) on 300 mm	High duty cycles	Adverse environment (Spec. steel, pollution)
	SD/BD/SH Diameter ∅ 6 to 16 mm	Up to 7,6 kN	G9 (130 µ) to G5 (23 µ)		Good
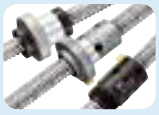	**SX/BX, SN/BN/PN** **SND/BND/PND** **SL/TL, SLD/TLD** DIN standard ∅ 16 to 63 mm	Up to 95 kN	G9 (130 µ) to G5 (23 µ)		Satisfactory
	SKD, BKD, **PKD, PGFM/PGF** ∅ 16 to 150 mm	Up to 374 kN	G5 (23 µ) to G1 (6 µ)		Satisfactory
	SRC, SRF, BRC, BRF, **PRU, PRK, HRC, HRP** ∅ 8 to 240 mm	Up to 3 200 kN	G5 (23 µ) to G1 (6 µ)		Exceptional

Precision rolled ball screws

Fig. 9

Complete assemblies

A complete range of accessories is available and can be delivered completely assembled. Just ask when ordering (**fig. 9**).

Service range

Quick service for precision rolled ball screws

For reduced delivery time, SKF operates quick service facilities in Europe and in North America, where standard screw shafts, nuts and accessories are stocked.

Ball screw orders

Customers can order ball screws with the following options:

- Stock items of screws shafts and nuts, without machined ends. Nuts with axial play mounted on screw shaft, or on sleeve. Nuts with backlash elimination or with preload mounted on shaft
- Ball screw assemblies with shaft ends machined according to standard ends as defined in this catalogue
- Ball screw assemblies with shaft ends machined according to customer requirements: In this case, please send a drawing with all dimensional and tolerance requirements, and with all specifications written in English
- Complete ball screw assemblies, including accessories presented in this catalogue. Accessories already mounted on nut or shaft, or delivered separately

General rules

Delivery time
- From a couple of days to maximum two weeks is possible for orders meeting the following conditions:

Quantity
- Maximum 5 pieces for types SX/BX - SN/BN/PN - SL/TL
- Maximum 15 pieces for types SH - SD/BD

Materials
- Both shafts and nuts should be made of standard steel (refer to our ball screw catalog). Neither stainless steel nor special treatments are accepted through this quick channel

Capabilities
- Standard nuts, including DIN nuts
- Screw shafts as per customer drawing (splines & special treatments are not possible)
- Preload by oversized balls accepted for BX - BN/BND - TL/TLD
- Rotating nut SLT/TLT types are excluded

Available range

Diameters	Leads	Nut types	Precision classes	Accessories
From 6 to 63 mm	From 2 to 50 mm	Cylindrical and flanged with axial play, backlash elimination, or preload, SKF designs or DIN designs	G5 - G7 - G9	Flanges for nuts, and end bearing units for screw shafts

N.B.:
In addition to this catalogue, all product brochures are available on **www.skf.com** *as PDF files.*

Please visit www.skf.com for latest update of SKF ball screw catalogue

3 Ball & roller screws

Precision rolled ball screws

Ordering key

[ ] [ ] [ ] [ ] / [ ] [ ] [ ] - [ ] [ ] [ ] / [ ] [ ]

Nut type:

Miniature screw, axial play, recirculation by inserts	SD
Miniature screw, backlash elimination, recirculation by inserts	BD
Miniature screw, axial play, recirculation by integrated tube	SH
Miniature screw, axial play, stainless steel	SDS
Miniature screw, backlash elimination, stainless steel	BDS
Miniature screw, axial play, stainless steel recirculation by integrated tube	SHS
Universal screw, axial play	SX
Universal screw, backlash elimination	BX
Precision screw, axial play, DIN nut	SND
Precision screw, backlash elimination, DIN nut	BND
Precision screw, preloaded, DIN nut	PND
Precision screw, axial play, cylindrical flange	SN
Precision screw, backlash elimination, cylindrical flange	BN
Precision screw, preloaded, cylindrical flange	PN
Long lead screw, axial play	SL
Long lead screw, backlash elimination	TL
Long lead screw, axial play, DIN nut	SLD
Long lead screw, backlash elimination, DIN nut	TLD
Rotating nut with axial play	SLT
Rotating nut with backlash elimination	TLT

Nominal diameter × lead (mm)

Hand:

Right	R
Left (on request)	L

Threaded length / Total length (mm)

Lead precision:

G5, G7, G9

Nut orientation:

Nut threaded nose or nut flange towards shorter machined end of shaft (S)
Nut threaded nose or nut flange towards longer machined end of shaft (L)
In case of identical machining at both shaft ends (–)

Machined end combination:

See page **138-141**

Required lengths for AA, SA, UA (both ends):

See page **138**

/

Options:

With wipers	WPR
Without wipers	NOWPR
Safety ring (for miniature ball screws only)	RING
Reduced axial play	REDPLAY

Example: PND | 32×5 | R | 330 / 380 | G7 | L - SA | +K | 30 / 20 | NOWPR

Symbols, see **page 191**

Notes

3 Ball & roller screws

Precision rolled ball screws

SD/BD/SH - Miniature ball screws

Ball recirculation with composite inserts for SD, BD types. Threaded nose for easy mounting
SD: axial play
BD: backlash elimination by oversized balls
SH: ball recirculation through tube integrated in the nut.
Lead precision G5, G7 or G9

SX/BX - Universal ball screws

Ball recirculation with composite inserts, threaded nose for easy mounting
Accessories: see **pages 129 and 142–143**.
Steel inserts are optional
SX: axial play
BX: backlash elimination by oversized balls
Lead precision G5, G7 or G9

Designations	Nominal diameter	Lead	Dimensions Shaft			Nut			
	d_0	P_h	d_1	d_2	L Max	L	L_1	D_1 h10	M_1 6g
	mm								
SH 6×2R	6	2	6	4,7	1 000	20	7,5	16,5	M14×1
SD/BD 8×2,5R	8	2,5	7,6	6,3	1 000	23,5	7,5	17,5	M15×1
SD/BD 10×2R	10	2	9,5	8,3	1 000	22	7,5	19,5	M17×1
SH 10×3R	10	3	9,93	7,8	1 000	29	9	21	M18×1
SD/BD 10×4R	10	4	8,9	7,4	1 000	28	8	21	M18×1
SD/BD 12×2R	12	2	11,15	9,9	2 000	20	8	20	M18×1
SD/BD 12×4R	12	4	11,3	9,4	2 000	34	10	25,5	M20×1
SD/BD 12×5R	12	5	11,81	9,3	2 000	36	10	23	M20×1
SH 12,7×12,7R	12,7	12,7	13,04	10,2	2 000	50	12	29,5	M25×1,5
SD/BD 14×4R	14	4	13,7	11,9	2 000	30	8	27	M22×1,5
SD/BD 16×2R	16	2	15,5	14,3	2 000	27	12	29,5	M25×1,5
SD/BD 16×5R	16	5	15,2	12,7	2 000	42	12	32,5	M26×1,5
SD/BD 16×10R	16	10	15,23	12,6	2 000	46	12	32,5	M26×1,5
SX/BX 20×5R	20	5	19,4	16,7	4 700	54	14	38	M35×1,5
SX/BX 25×5R	25	5	24,65	21,7	4 700	69	19	43	M40×1,5
SX/BX 25×10R	25	10	24,64	20,5	4 700	84	19	43	M40×1,5
SX/BX 32×5R	32	5	31,58	28,7	5 700	64	19	52	M48×1,5
SX/BX 32×10R	32	10	31,95	27,8	5 700	95	19	54	M48×1,5
SX/BX 40×5R	40	5	39,56	36,7	5 700	65	19	60	M56×1,5
SX/BX 40×10R	40	10	39,36	34	5 700	105	24	65	M60×2
SX/BX 40×40R	40	40	38,34	34,2	5 700	121	24	65	M60×2
SX/BX 50×10R	50	10	49,65	44	5 700	135	29	78	M72×2
SX/BX 63×10R	63	10	62,78	57	5 700	135	29	93	M85×2

Symbols, see **page 191**

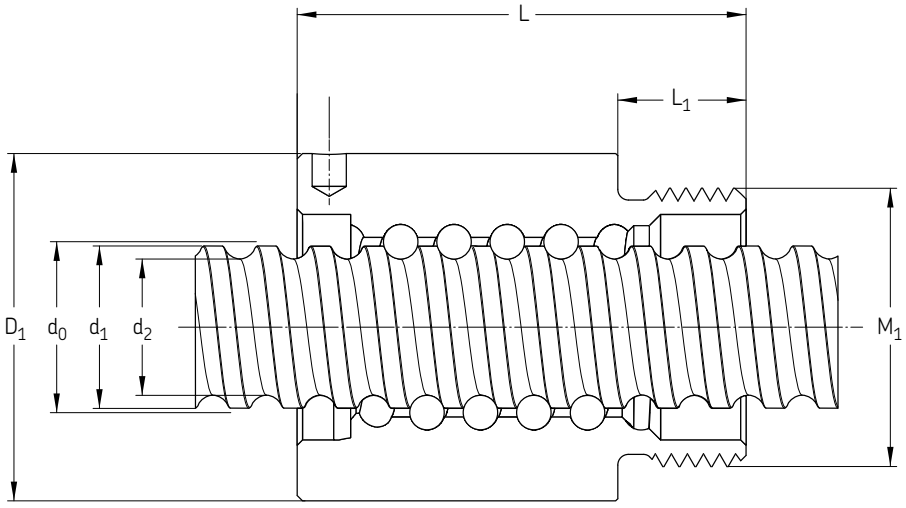

Designations	Basic load ratings dynamic Ca	static C_{0a}	Support bearing Recommended thrust support bearings	Recommended support pillow block
	kN			
SH 6×2R	1,9	2,2	-	-
SD/BD 8×2,5R	2,2	2,7	-	-
SD/BD 10×2R	2,5	3,6	-	-
SH 10×3R	2,6	3,3	-	-
SD/BD 10×4R	4,5	5,5	-	-
SD/BD 12×2R	2,9	4,7	-	-
SD/BD 12×4R	4,9	6,6	-	-
SD/BD 12×5R	4,2	5,4	-	-
SH 12,7×12,7R	6,6	8,9	-	-
SD/BD 14×4R	6,0	9,1	-	-
SD/BD 16×2R	3,3	6,2	FLBU 16/PLBU 16	BUF 16
SD/BD 16×5R	7,6	10,7	FLBU 16/PLBU 16	BUF 16
SD/BD 16×10R	10,7	17,2	FLBU 16/PLBU 16	BUF 16
SX/BX 20×5R	14,0	23,8	PLBU 20/FLBU 20(**)	BUF 20
SX/BX 25×5R	19,0	37,8	PLBU 25/FLBU 25	BUF 25
SX/BX 25×10R	23,5	39,0	PLBU 25/FLBU 25	BUF 25
SX/BX 32×5R	22,0	51,6	PLBU 32/FLBU 32	BUF 32
SX/BX 32×10R	27,1	52,0	PLBU 32/FLBU 32/FLRBU 3(*)	BUF 32
SX/BX 40×5R	24,3	65,6	PLBU 40/FLBU 40	BUF 40
SX/BX 40×10R	61,5	124,1	PLBU 40/FLBU 40/FLRBU 4(*)	BUF 40
SX/BX 40×40R	31,3	72,9	PLBU 40/FLBU 40	BUF 40
SX/BX 50×10R	80,4	188,8	PLBU 50/FLBU 50/FLRBU 5(*)	BUF 50
SX/BX 63×10R	91,2	248,3	PLBU 63/FLBU 63	BUF 63

* For high load applications, use FLRBU type. Please refer to end shaft and support bearing definitions, pages **188-190.**
** For high load application, please contact SKF.

Symbols, see **page 191**

3 Ball & roller screws
Precision rolled ball screws

SDS/BDS/SHS - Miniature ball screws in stainless steel

Ball recirculation with composite inserts for SDS, BDS types. Threaded nose for easy mounting
SDS: axial play
BDS: backlash elimination by oversized balls
SHS: ball recirculation through tube integrated in the nut
Standard lead precision G7 or G9.

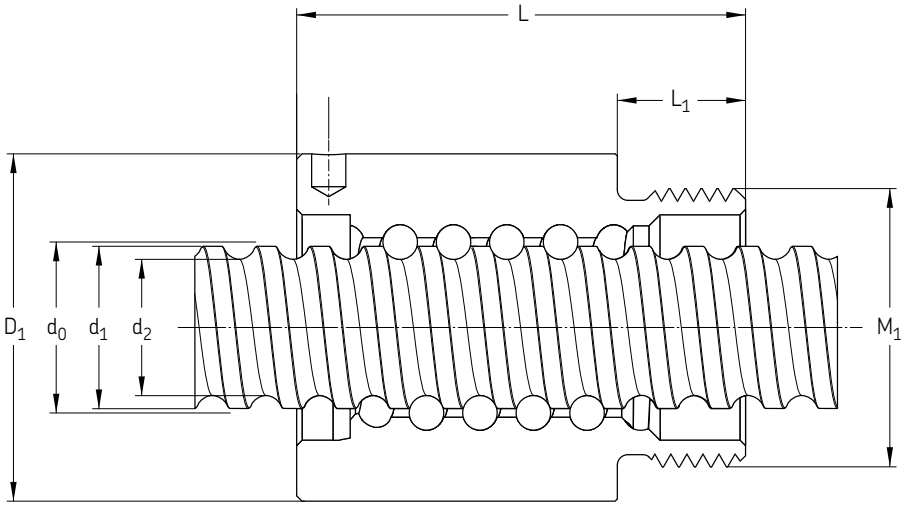

Designations	Nominal diameter	Lead	Dimensions Shaft			Nut				Basic load ratings dynamic	static
	d_0	P_h	d_1	d_2	L Max	L	L_1	D_1 h10	M_1 6g	Ca	C_{0a}
	mm									kN	
SHS 6×2R	6	2	6	4,7	1 000	20	7,5	16,5	M14×1	1,2	1,1
SDS/BDS 8×2,5R	8	2,5	7,6	6,3	1 000	23,5	7,5	17,5	M15×1	1,4	1,3
SDS/BDS 10×2R	10	2	9,5	8,3	1 000	22	7,5	19,5	M17×1	1,6	1,8
SDS/BDS 12×2R	12	2	11,15	9,9	2 000	20	8	20	M18×1	1,9	2,3
SDS/BDS 12×4R	12	4	11,3	9,4	2 000	34	10	25,5	M20×1	3,1	3,3
SDS/BDS 12×5R	12	5	11,81	9,3	2 000	36	10	23	M20×1	2,7	2,7
SDS/BDS 14×4R	14	4	13,7	11,9	2 000	30	8	27	M22×1,5	3,8	4,6
SDS/BDS 16×2R	16	2	15,5	14,3	2 000	27	12	29,5	M25×1,5	2,1	3,1
SDS/BDS 16×5R	16	5	15,2	12,7	2 000	42	12	32,5	M26×1,5	4,8	5,4

Designations	Support bearing Recommended thrust support bearings	Recommended support pillow block
SHS 6×2R	-	-
SDS/BDS 8×2,5R	-	-
SDS/BDS 10×2R	-	-
SDS/BDS 12×2R	-	-
SDS/BDS 12×4R	-	-
SDS/BDS 12×5R	-	-
SDS/BDS 14×4R	-	-
SDS/BDS 16×2R	FLBU 16/PLBU 16[1)]	BUF 16[1)]
SDS/BDS 16×5R	FLBU 16/PLBU 16[1)]	BUF 16[1)]

1) Support bearings with standard steel.

Accessories for SX/BX nuts

FHRF

Round flange (for SX nuts only)

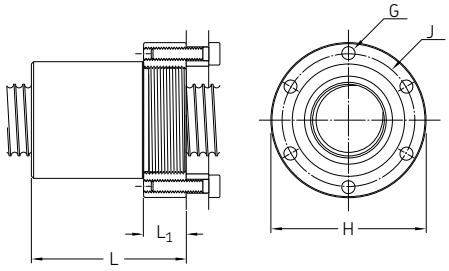

Designations	Nominal diameter	Lead	Dimensions				
	d_0	P_h	L	L_1 h14	G	J js12	H h12
	mm						
FHRF 20	20	5	55	15	M5	44	52
FHRF 25	25	5	70	20	M6	50	60
FHRF25	25	10	88	20	M6	50	60
FHRF 32	32	5	70	20	M6	59	69
FHRF 32	32	10	96	20	M6	59	69
FHRF 40×5	40	5	70	20	M8	69	82
FHRF 40×10	40	10	111	25	M10	76	92
FHRF 40×10	40	40	122	25	M10	76	92
FHRF 50	50	10	136	30	M12	91	110
FHRF 63	63	10	136	30	M12	106	125

FHSF

Square flange (for SX nuts only)

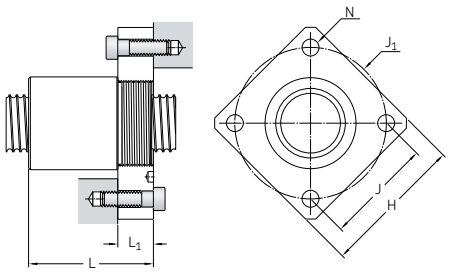

Designations	Nominal diameter	Lead	Dimensions					
	d_0	P_h	L	L_1 h14	H h14	J js12	J_1	N
	mm							
FHSF 20	20	5	55	15	60	45	63,6	6,6
FHSF 25	25	5	70	20	70	52	73,5	9
FHSF 25	25	10	88	20	70	52	73,5	9
FHSF 32	32	5	70	20	80	60	84,8	9
FHSF 32	32	10	96	20	80	60	84,8	9
FHSF 40×5	40	5	70	20	90	70	99	11
FHSF 40×10	40	10	111	25	100	78	110,3	13
FHSF 40×10	40	40	122	25	100	78	110,3	13
FHSF 50	50	10	136	30	120	94	133	15
FHSF 63	63	10	136	30	130	104	147	15

FHTF

Trunnion flange (for SX nuts only)

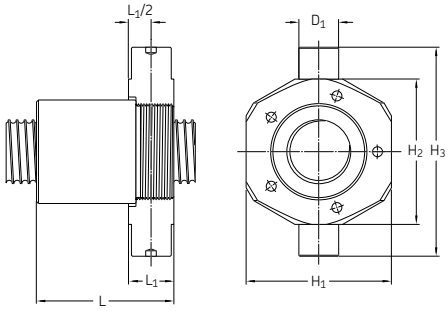

Designations	Nominal diameter	Lead	Dimensions					
	d_0	P_h	L	L_1	H_1 js16	H_2 h12	H_3 h12	D_1 h8
	mm							
FHTF 20	20	5	57	17	55	56	80	15
FHTF 25	25	5	71	21	60	65	97	18
FHTF 25	25	10	86	21	60	65	97	18
FHTF 32	32	5	68	23	73	73	105	20
FHTF 32	32	10	99	23	73	73	105	20
FHTF 40×5	40	5	69	23	85	85	117	20
FHTF 40×10	40	10	108,5	27,5	98	98	140	25
FHTF 40×10	40	40	124,5	27,5	98	98	140	25
FHTF 50	50	10	139	33	120	120	162	30
FHTF 63	63	10	139	33	135	135	177	30

Symbols, see **page 191**

3 Ball & roller screws

Precision rolled ball screws

SND/BND - Precision ball screws

Ball recirculation with composite inserts, nut shape according to DIN standard. Steel inserts are optional
SND: axial play
BND: backlash elimination by oversized balls
Lead precision G5, G7 or G9.

PND - Precision ball screws

Ball recirculation with composite inserts, nut shape according to DIN standard, preloaded for optimal rigidity. Steel inserts are optional
Lead precision G5, G7 or G9.

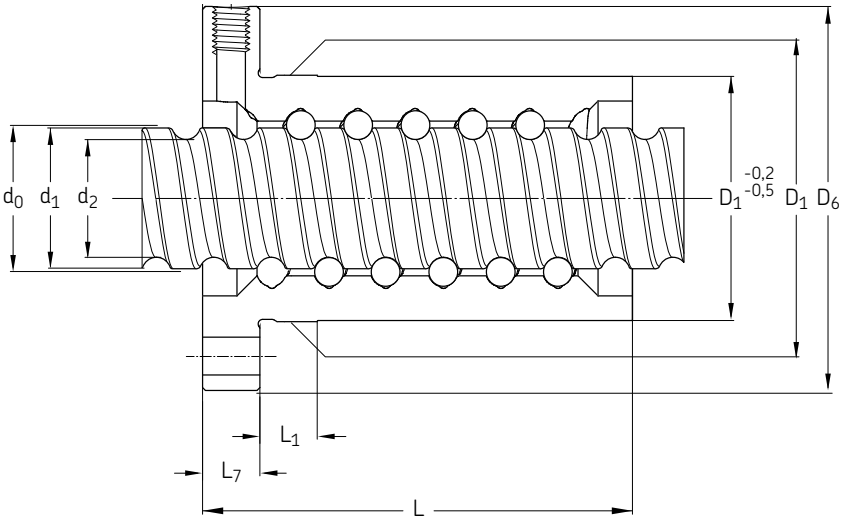

Designations	Nominal diameter	Lead	Dimensions Shaft			Nut							
	d_0	P_h	d_1	d_2	L Max	L	L_1	L_7	L_8 h13	D_1 g6	D_4	D_5 H13	D_6 h13
	mm												
SND/BND 16×5R	16	5	15,2	12,7	2 000	43,5	10	10	40	28	38	5,5	48
PND 16×5R	16	5	15,2	12,7	2 000	48	10	10	40	28	38	5,5	48
SDD/BDD 16×10R	16	10	15,23	12,6	2 000	47	37	10	40	28	38	5,5	48
GDD 16×10R	16	10	15,23	12,6	2 000	87	77	10	40	28	38	5,5	48
SND/BND 20×5R	20	5	19,4	16,7	4 700	44,5	10	10	44	36	47	6,6	58
PND 20×5R	20	5	19,4	16,7	4 700	50	10	10	44	36	47	6,6	58
SND/BND 25×5R	25	5	24,65	21,7	4 700	44,5	10	10	48	40	51	6,6	62
PND 25×5R	25	5	24,65	21,7	4 700	62	10	10	48	40	51	6,6	62
SND/BND 25×10R	25	10	24,64	20,5	4 700	75	10	10	48	40	51	6,6	62
PND 25×10R	25	10	24,64	20,5	4 700	75	10	10	48	40	51	6,6	62
SND/BND 32×5R	32	5	31,58	28,7	5 700	51,5	10	12	62	50	65	9	80
PND 32×5R	32	5	31,58	28,7	5 700	74	10	12	62	50	65	9	80
SND/BND 32×10R	32	10	31,95	27,8	5 700	64	10	12	62	50	65	9	80
PND 32×10R	32	10	31,95	27,8	5 700	100	10	12	62	50	65	9	80
SND/BND 40×5R	40	5	39,56	36,7	5 700	58,5	10	14	70	63	78	9	93
PND 40×5R	40	5	39,56	36,7	5 700	88	10	14	70	63	78	9	93
SND/BND 40×10R	40	10	39,36	34	5 700	91,0	20	14	70	63	78	9	93
PND 40×5R	40	10	39,36	34	5 700	130	20	14	70	63	78	9	93
SND/BND 50×10R	50	10	49,65	44	5 700	93,0	10	16	85	75	93	11	110
PND 50×10R	50	10	49,65	44	5 700	151	10	16	85	75	93	11	110
SND/BND 63×10R	63	10	62,78	57	5 700	95,0	10	18	95	90	108	11	125
PND 63×10R	63	10	62,78	57	5 700	153	10	18	95	90	108	11	125

Symbols, see **page 191**

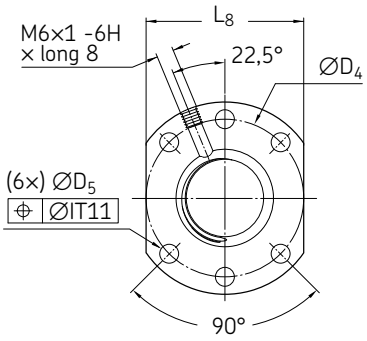

Design 1

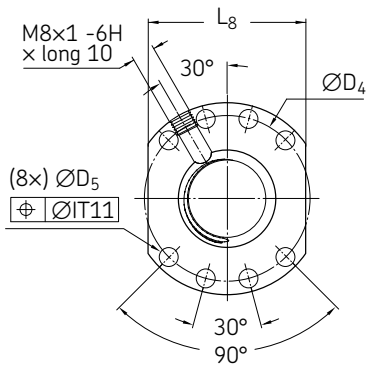

Design 2

Designations	Basic load ratings dynamic	static	Number of circuits of balls	Design	Support bearing Recommended thrust support bearings	Recommended support pillow block
	C_a	C_{oa}				
	kN		–			
SND/BND 16×5R	7,8	10,7	3	1	FLBU 16/PLBU 16	BUF 16
PND 16×5R	5,5	7,1	2×2	1	FLBU 16/PLBU 16	BUF 16
SDD/BDD 16×10R	10,7	17,2	2×1,8	1	FLBU 16/PLBU 16	BUF 16
GDD 16×10R	10,7	17,2	2×1,8	1	FLBU 16/PLBU 16	BUF 16
SND/BND 20×5R	11,3	17,9	3	1	PLBU 20/FLBU 20	BUF 20
PND 20×5R	8,0	11,9	2×2	1	FLBU 20/PLBU 20	BUF 20
SND/BND 25×5R	12,7	22,7	3	1	PLBU 25/FLBU 25	BUF 25
PND 25×5R	12,7	22,7	2×3	1	FLBU 25/PLBU 25	BUF 25
SND/BND 25×10R	24,1	39,0	4	1	PLBU 25/FLBU 25	BUF 25
PND 25×10R	13,3	19,5	2×2	1	FLBU 25/PLBU 25	BUF 25
SND/BND 32×5R	19,0	41,3	4	1	PLBU 32/FLBU 32	BUF 32
PND 32×5R	19,0	41,3	2×4	1	FLBU 32/PLBU 32	BUF 32
SND/BND 32×10R	21,9	39,0	3	1	PLBU 32/FLBU 32	BUF 32
PND 32×10R	21,9	39,0	2×3	1	FLBU 32/PLBU 32	BUF 32
SND/BND 40×5R	25,6	65,6	5	2	PLBU 40/FLBU 40	BUF 40
PND 40×5R	25,6	65,6	2×5	2	FLBU 40/PLBU 40	BUF 40
SND/BND 40×10R	63,3	124,1	5	2	PLBU 40/FLBU 40/FLRBU 4(*)	BUF 40
PND 40×5R	52,2	99,3	2×4	2	FLBU 40/PLBU 40/FLRBU 4	BUF 40
SND/BND 50×10R	71,3	157,3	5	2	PLBU 50/FLBU 50/FLRBU 5(*)	BUF 50
PND 50×10R	71,3	157,3	2×5	2	FLBU 50/PLBU 50/FLRBU 5	BUF 50
SND/BND 63×10R	81,5	206,9	5	2	PLBU 63/FLBU 63	BUF 63
PND 63×10R	81,5	206,9	2×5	2	FLBU 63/PLBU 63	BUF 63

* For high load applications, use FLRBU type. Please refer to end shaft and support bearing definitions, pages **188-190**

Symbols, see **page 191**

3 Ball & roller screws

Precision rolled ball screws

SN/BN - Precision ball screws

Ball recirculation with composite inserts
Steel inserts are optional
SN: axial play
BN: backlash elimination by oversized balls
Lead precision G5, G7 or G9.

PN - Precision ball screws

Ball recirculation with composite inserts, preloaded for optimal rigidity. Steel inserts are optional
Lead precision G5, G7 or G9.

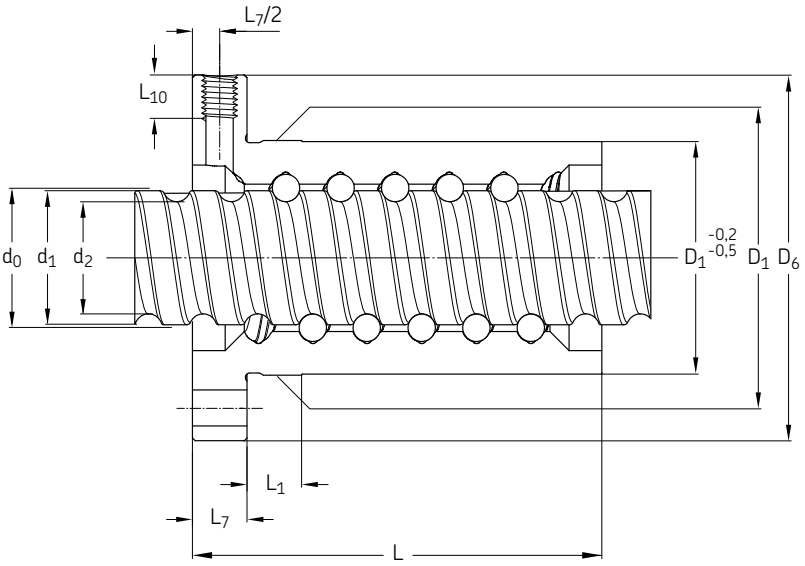

Designations	Nominal diameter	Lead	Dimensions Shaft			Nut								
	d_0	P_h	d_1	d_2	L Max	L	L_1	L_7	M_2 6H	L_{10}	D_1 g6	D_4 js12	D_5 H13	D_6 h13
	mm													
SN/BN 16×5R	16	5	15,2	12,7	2 000	43,5	10	10	M6	8	28	38	6x5,5	48
PN 16×5R	16	5	15,2	12,7	2 000	48	10	10	M6	8	28	38	6x5,5	48
SN/BN 20×5R	20	5	19,4	16,7	4 700	44,5	10	10	M6	8	33	45	6x6,6	57
PN 20×5R	20	5	19,4	16,7	4 700	50	10	10	M6	8	33	45	6x6,6	57
SN/BN 25×5R	25	5	24,65	21,7	4 700	44,5	10	10	M6	8	38	50	6x6,6	62
PN 25×5R	25	5	24,65	21,7	4 700	62	10	10	M6	8	38	50	6x6,6	62
SN/BN 25×10R	25	10	24,64	20,5	4 700	75	10	10	M6	8	43	55	6x6,6	67
PN 25×10R	25	10	24,64	20,5	4 700	75	10	10	M6	8	43	55	6x6,6	67
SN/BN 32×5R	32	5	31,58	28,7	5 700	51,5	10	12	M6	8	45	58	6x6,6	70
PN 32×5R	32	5	31,58	28,7	5 700	74	10	12	M6	8	45	58	6x6,6	70
SN/BN 32×10R	32	10	31,95	27,8	5 700	64	10	12	M8×1	10	54	70	6x9	87
PN 32×10R	32	10	31,95	27,8	5 700	100	10	12	M8×1	10	54	70	6x9	87
SN/BN 40×5R	40	5	39,56	36,7	5 700	58,5	10	14	M6	8	53	68	6x6,6	80
PN 40×5R	40	5	39,56	36,7	5 700	88	10	14	M6	8	53	68	6x6,6	80
SN/BN 40×10R	40	10	39,36	34	5 700	91	20	14	M8×1	10	63	78	6x9	95
PN 40×5R	40	10	39,36	34	5 700	126	20	14	M8×1	10	63	78	6x9	95
SN/BN 50×10R	50	10	49,65	44	5 700	99	10	16	M8×1	10	72	90	6x11	110
PN 50×10R	50	10	49,65	44	5 700	151	10	16	M8×1	10	72	90	6x11	110
SN/BN 63×10R	63	10	62,78	57	5 700	101	10	18	M8×1	10	85	105	6x11	125
PN 63×10R	63	10	62,78	57	5 700	153	10	18	M8×1	10	85	105	6x11	125

Symbols, see **page 191**

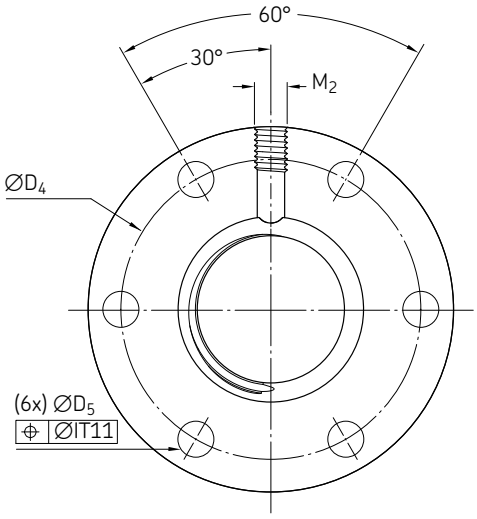

Designations	Basic load ratings dynamic	static	Number of circuits of balls	Support bearing Recommended thrust support bearings	Recommended support pillow block
	C_a	C_{oa}			
	kN		–		
SN/BN 16×5R	7,8	10,7	3	FLBU 16/PLBU 16	BUF 16
PN 16×5R	5,5	7,1	2×2	FLBU 16/PLBU 16	BUF 16
SN/BN 20×5R	11,3	17,9	3	PLBU 20/FLBU 20	BUF 20
PN 20×5R	8,0	11,9	2×2	PLBU 20/FLBU 20	BUF 20
SN/BN 25×5R	12,7	22,7	3	PLBU 25/FLBU 25	BUF 25
PN 25×5R	12,7	22,7	2×3	PLBU 25/FLBU 25	BUF 25
SN/BN 25×10R	24,1	39,0	4	PLBU 25/FLBU 25	BUF 25
PN 25×10R	13,3	19,5	2×2	PLBU 25/FLBU 25	BUF 25
SN/BN 32×5R	19,0	41,3	4	PLBU 32/FLBU 32	BUF 32
PN 32×5R	19,0	41,3	2×4	PLBU 32/FLBU 32	BUF 32
SN/BN 32×10R	21,9	39,0	3	PLBU 32/FLBU 32	BUF 32
PN 32×10R	21,9	39,0	2×3	PLBU 32/FLBU 32	BUF 32
SN/BN 40×5R	25,6	65,6	5	PLBU 40/FLBU 40	BUF 40
PN 40×5R	25,6	65,6	2×5	PLBU 40/FLBU 40	BUF 40
SN/BN 40×10R	63,3	124,1	5	PLBU 40/FLBU 40/FLRBU 4 (*)	BUF 40
PN 40×5R	52,2	99,3	2×4	PLBU 40/FLBU 40/FLRBU 4 (*)	BUF 40
SN/BN 50×10R	71,3	157,3	5	PLBU 50/FLBU 50/FLRBU 5 (*)	BUF 50
PN 50×10R	71,3	157,3	2×5	PLBU 50/FLBU 50/FLRBU 5 (*)	BUF 50
SN/BN 63×10R	81,5	206,9	5	PLBU 63/FLBU 63	BUF 63
PN 63×10R	81,5	206,9	2×5	PLBU 63/FLBU 63	BUF 63

* For high load applications, use FLRBU type. Please refer to end shaft and support bearing definitions, pages **188-190**

Symbols, see **page 191**

3 Ball & roller screws

Precision rolled ball screws

SL/TL - Long lead screws

Ball recirculation through the end faces of the nut.
SL: axial play
TL: backlash elimination.

SLD/TLD - Long lead ball screws

Ball recirculation through the end faces of the nut. Nut according to DIN standard.
SLD: axial play
TLD: backlash elimination.

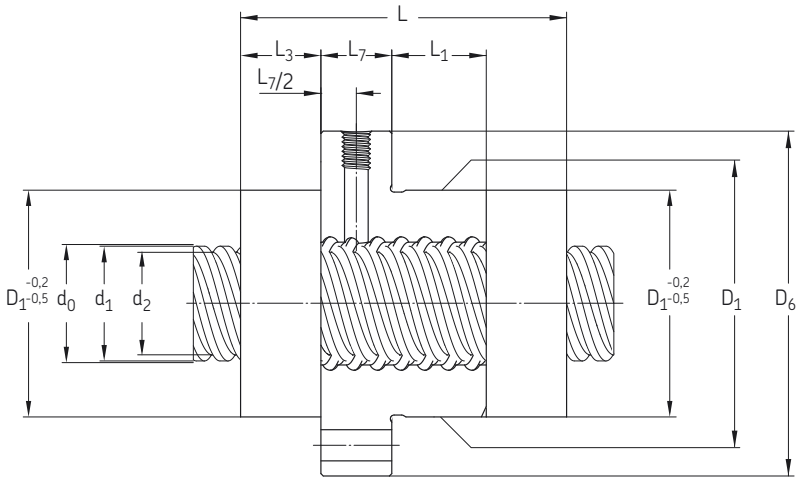

Designations	Nominal diameter	Lead	Dimensions Shaft			Nut								
	d_0	P_h	d_1	d_2	L Max	L	L_1	L_3	L_7	D_1 g9	D_4 js12	D_5 H13	D_6	M_2 6H
	mm													
SL/TL 25×20R	25	20	24,29	21,7	4 700	66,8	18	17,6	15	48	60	6×6,6	73	M6
SL/TL 25×25R	25	25	24,38	21,5	4 700	78,2	27	18,7	15	48	60	6×6,6	73	M6
SL/TL 32×20R	32	20	30,06	27,4	5 700	67,4	18	17,9	15	56	68	6×6,6	80	M6
SL/TL 32×32R	32	32	31,066	28,4	5 700	80,3	41	13	15	56	68	6×6,6	80	M6
SLD/TLD 32×32R	32	32	31,066	28,4	5 700	80,3	41	13	15	50*	65	6×9	80	M6
SL/TL 32×40R	32	40	29,58	26,9	5 700	54,8	17	12,2	15	53*	68	6×6,6	80	M6
SL/TL 40×20R	40	20	37,77	35,1	5 700	87,3	38	18	15	63	78	6×9	95	M6
SL/TL 40×40R	40	40	38,34	34,2	5 700	110,8	44	21,6	25	72	90	6×11	110	M8×1
SL/TL 50×50R	50	50	49,14	43,4	5 700	134	60	25,5	25	85	105	6×11	125	M8×1

* Tolerance g6

Symbols, see **page 191**

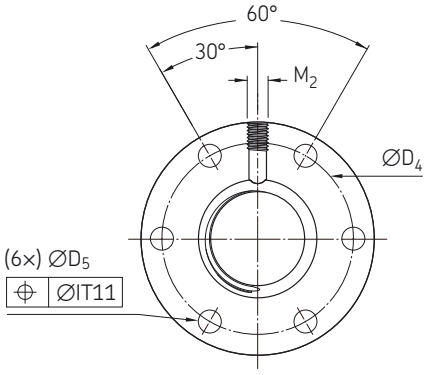

SL/TL

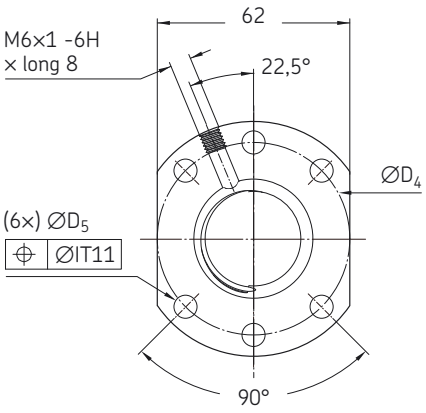

SLD/TLD

Designations	SL Basic load ratings dynamic C_a	static C_{oa}	TL Basic load ratings dynamic C_a	static C_{oa}	Support bearing Recommended thrust support bearings	Recommended support pillow block
	kN					
SL/TL 25×20R	22,8	51,5	12,6	25,8	PLBU 25/FLBU 25	BUF 25
SL/TL 25×25R	22,3	50,6	12,3	25,3	PLBU 25/FLBU 25	BUF 25
SL/TL 32×20R	25,4	65,2	14,0	32,6	PLBU 32/FLBU 32/FLRBU 3 (*)	BUF 32
SL/TL 32×32R	26,1	69,3	14,4	34,7	PLBU 32/FLBU 32/FLRBU 3 (*)	BUF 32
SLD/TLD 32×32R	26,1	69,3	14,4	34,7	PLBU 32/FLBU 32/FLRBU 3 (*)	BUF 32
SL/TL 32×40R	12,6	29,8	6,9	14,9	PLBU 32/FLBU 32	BUF 32
SL/TL 40×20R	41,3	128,8	22,8	64,4	PLBU 40/FLBU 40	BUF 40
SL/TL 40×40R	51,7	130,5	28,5	65,3	PLBU 40/FLBU 40/FLRBU 4 (*)	BUF 40
SL/TL 50×50R	92,9	235,1	51,2	117,6	PLBU 50/FLBU 50/FLRBU 5 (*)	BUF 50

* For high load applications, use FLRBU type. Please refer to end shaft and support bearing definitions, pages **188-190**

Symbols, see **page 191**

3 Ball & roller screws
Precision rolled ball screws

Rotating nut

The nut rotates inside bearings and moves along the fixed long lead screw shaft. The drive motor moves with the nut, so inertia and critical speed problems, associated with a long rotating shaft, are minimised (**figs. 10 and 11**).

Two versions are available:
SLT: rotating nut using ball screw with axial play
TLT: rotating nut using ball screw with backlash elimination.

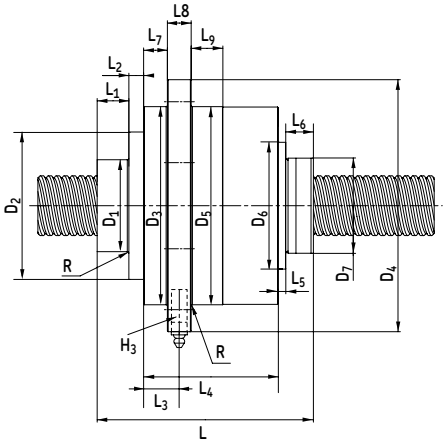

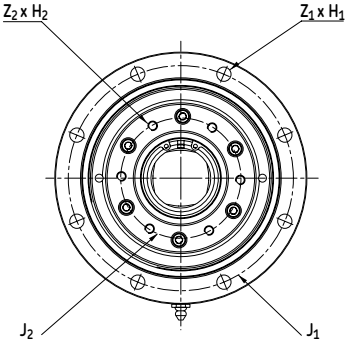

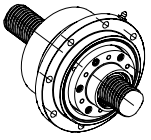

Nominal diameter	Lead (right hand)	Ball screw capacities SL Basic load ratings		TL Basic load ratings		Bearing Basic load ratings	
	P_h	C_a	C_{oa}	C_a	C_{oa}	C_a	C_{oa}
mm		kN					
25	20	39,2	97,0	21,6	48,5	61,8	56
	25	33,2	80,4	18,3	40,2	61,8	56
32	20	49,6	141,8	27,3	70,9	78	76,5
	32	32,2	88,6	17,3	44,3	78	76,5
	40	25,3	67,0	13,9	33,5	78	76,5
40	20	54,2	176,5	29,8	88,3	93,6	91,5
	40	51,7	130,5	28,5	65,3	114	118
50	50	92,9	235,1	51,2	117,6	156	166

Rotating nut inertia

Size	Inertia pulley support	Mass of rotating nut
	$kgmm^2$	kg
25×20	1 012	4,5
25×25	1 023	4,6
32×20	1 935	7,2
32×32	1 919	7,1
32×40	1 949	7,1
40×20	3 095	7,5
40×40	3 784	8,4
50×50	11 482	15,5

Rotating nut capacities

Size	Max transmissible torque	Max transmissible axial load
	Nm	kN
25×20	180	68,3
25×25	180	68,3
32×20	209	107
32×32	209	87,3
32×40	209	81,7
40×20	240	116
40×40	246	93,3
50×50	803	162

Symbols, see **page 191**

Fig. 10

Fig. 11

Designations	Dimensions												
$d_0 \times P_h$	D_1 h8	D_2	D_3	D_4	D_5 g6	D_6	D_7	R max	J_1	J_2	$Z_1 \times H_1$	$Z_2 \times H_2 \times$ useful length	H_3
	mm												
SLT/TLT 25×20 R	40	72,5	100	133	100	65	48	0,8	116	55	6×Ø9	6×M6×20	M6×1
SLT/TLT 25×25 R	40	72,5	100	133	100	65	48	0,8	116	55	6×Ø9	6×M6×20	M6×1
SLT/TLT 32×20 R	50	82	119,5	150	120	76	56	0,8	135	68	6×Ø9	6×M6×20	M6×1
SLT/TLT 32×32 R	50	82	119,5	650	120	76	50	0,8	135	68	6×Ø9	6×M6×20	M6×1
SLT/TLT 32×40 R	50	82	119,5	150	120	76	53	0,8	135	68	6×Ø9	6×M6×20	M6×1
SLT/TLT 40×20 R	58	93	125	159	125	80	63	0,8	142	75	8×Ø9	6×M6×20	M8×1
SLT/TLT 40×40 R	60	93	137	168	137	N/A	72	1,6	153	80	8×Ø9	6×M6×20	M8×1
SLT/TLT 50×50 R	70	120	170	210	170	110	85	1,6	190	106	8×Ø11	6×M8×30	M8×1

All tolerances js13 if not specified

Designations	Dimensions									
$d_0 \times P_h$	L	L_1	L_2	L_3	L_4	L_5	L_6	L_7	L_8	L_9
	mm									
SLT/TLT 25×20 R	121,2	15	12,4	19,9	74	2,9	16,9	12,4	15	15
SLT/TLT 25×25 R	126,3	15	12,4	19,9	74	2,9	22	12,4	15	15
SLT/TLT 32×20 R	132,9	20	3,8	27,5	89	2,2	17,9	20	15	20
SLT/TLT 32×32 R	126,8	20	3,8	27,5	89	2,2	11,8	20	15	20
SLT/TLT 32×40 R	125,9	20	3,8	27,5	89	2,2	10,9	20	15	20
SLT/TLT 40×20 R	136,7	20	9,3	22,5	85	4,7	17,7	15	15	20
SLT/TLT 40×40 R	159,6	47	8,8	19	83	0	20,8	11,5	15	20
SLT/TLT 50×50 R	163,5	20	15,5	25,4	100	4,5	23,5	15,7	20	25

Symbols, see **page 191**

Shaft end combinations for rolled ball screws

In the ordering key, shaft end machining is defined by:
– One letter for nominal diameter d_0 < 16 mm
– Two letters for nominal diameter d_0 ≥ 16 mm
detailing the combination of two machined ends (see designation **page 124**).

Machined ends are detailed on **page 139** for nominal diameter d_0 < 16 mm and on **pages 140–141** for nominal diameter d_0 ≥ 16 mm

S, SA and UA end machining types

*) S and SA: end is machined to thread root diameter d_2. It is possible for all screw shaft nominal diameters (**fig. 12**)
*) UA: end is machined to diameter d_3 under induction hardened layer. Any length is possible. UA end machining is available for ball screws with nominal diameter d_0 starting from 16 mm (**fig. 12**).

Diameter < 16 mm		**Diameter ≥ 1 6 mm**	
Order code	Two machined ends	Order code	Two machined ends
A (without length indication)	cut only	AA (without length indication)	cut only
A (+ length)	cut + annealed		
B	1 + 2	BA	1A + 2A
F [1)]	2 + 2	FA [1)]	2A + 2A
G [1)]	2 + 3	GA [1)]	2A + 3A
H	2 + 4	HA	2A + 4A
J	2 + 5	JA	2A + 5A
M	3 + 5	MA	3A + 5A
S[*)] (+ length)	end machined to root diameter d_2, any possible length	SA[*)] (+ length)	end machined to root diameter d_2, any possible length
		UA[*)] (+ length)	end machined to diameter d_3 under induction hardening, any possible lengths.
K	Keyway	K	Keyway
Z	end machined according to customer drawing on request	Z	end machined according to customer drawing on request

1) This mounting requires the greatest care to avoid compressing the screw shaft. Please contact SKF.

Fig. 12

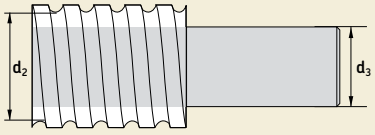

Dimensions	Ø d_2	Ø d_3
	mm	
6 × 2	4,7	
8 × 2,5	6,3	
10 × 2	8,3	
10 × 3	7,8	
10 × 4	7,4	
12 × 2	9,9	
12 × 4	9,4	
12 × 5	9,3	
12,7 × 12,7	10,2	
14 × 4	11,9	
16 × 2	14,3	12
16 × 5	12,7	9
16 × 10	12,6	9
20 × 5	16,7	14

Dimensions	Ø d_2	Ø d_3
	mm	
25 × 5	21,7	19
25 × 10	20,5	18
25 × 20	21,7	19
25 × 25	21,5	18
32 × 5	28,7	26
32 × 10	27,8	25
32 × 20	27,4	24
32 × 32	28,4	26
32 × 40	26,9	24
40 × 5	36,7	34
40 × 10	34,0	31
40 × 20	35,1	32
40 × 40	34,2	31
50 × 10	44,0	41
50 × 50	43,4	40
63 × 10	57,0	54

Symbols, see **page 191**

Standard end machining for nominal diameter < 16 mm

Special ends are machined according to customer drawing on request.

Type 1

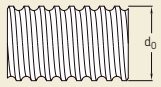

Type 2

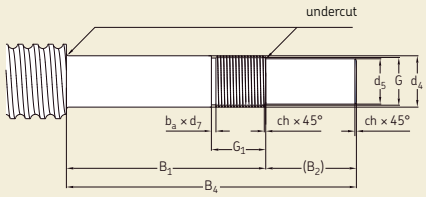

Keyway

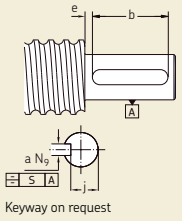

Keyway on request

Type 3

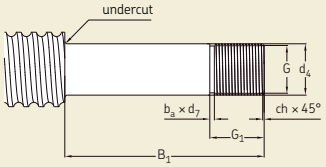

Type 4

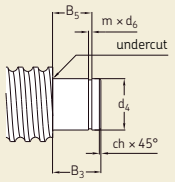

Type 5

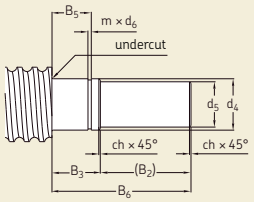

For SD/BD/SH, SDS/BDS/SHS

Dimensions Size d_0	d_5	d_4	B_1	B_2	B_3	B_4	B_5	B_6	G	G_1	m	d_6	ch	b_a	d_7	a	b	e	j	S	Keyway
	h_7	js_7	js_{12}		js_{12}	js_{12}	H_{11}	js_{12}	6g		+0,14 0	h_{11}/h_{12}			h_{11}	N9	+0,5 0				DIN 6885
6	3	4	22	10	7	32	5,4	17	M4×0,7	7	0,5	3,8	0,5	1,2	2,9						
8	4	5	24	12	7	36	5,6	19	M5×0,8	7,2	0,7	4,8	0,5	1,2	3,7						
10	5	6	26	12	9	38	6,7	21	M6×1	7,5	0,8	5,7	0,5	1,5	4,5						
12/12,7	6	8	38	12	10	50	7,8	22	M8×1	2,5	0,9	7,6	0,5	1,5	6,5	2	8	3	4,8	0,1	A2×2×8
14	8	10	40	16	12	56	9	28	M10×1,5	13,3	1,1	9,6	0,5	2,3	7,8	2	10	3	6,8	0,1	A2×2×10

Symbols, see **page 191**

Standard end machining for nominal diameter ≥ 16 mm

Standard shaft ends for ball screws with nominal diameter ≥ 16 mm have been developed to suit the SKF support bearings FLBU, PLBU and BUF.

These standard ends are the same for all screw types.
However, for the "SL/TL" long lead screw, an additional shoulder, part of the threaded length, will be machined to protect the wiper and nut thread during assembly (both ends).

End bearing ⇒	Machined end type
FLBU	2A or 3A
PLBU	2A or 3A
BUF	4A or 5A

For SD/BD, SDS/BDS, SX/BX, SND/BND/PND, SN/BN/PN

Dimensions																					Keyway to DIN6885	
Size d_0	d_5	d_4	d_{11}	d_{12}	B_1	B_2	B_3	B_4	B_5	B_6	B_7	d_8	G	G_1	m	d_6	ch_1	ch_2	b_a	d_7	$a^{N9} \times l \times b$	
	h_7	h_6	h_6	h_7	js_{12}		js_{12}	js_{12}	H_{11}	js_{12}			6g		+0,14 0	h_{11} / h_{12}				h_{11}	fixed end (type 2A)	free end (type 5A)
16	8	10	10	8	53	16	13	69	10	29	2	12,5	M10×0,75	17	1,1	9,6	0,5	0,5	1,2	8,8	A2×2×12	A2×2×12
20	10	12	10	8	58	17	13	75	10	29	2	14,5	M12×1	18	1,1	9,6	0,5	0,5	1,5	10,5	A3×3×12	A2×2×12
25	15	17	17	15	66	30	16	96	13	46	4,5	20	M17×1	22	1,1	16,2	0,5	0,5	1,5	15,5	A5×5×25	A5×5×25
32	17	20	17	15	69	30	16	99	13	46	4,5	21,7	M20×1	22	1,1	16,2	0,5	0,5	1,5	18,5	A5×5×25	A5×5×25
40	25	30	30	25	76	45	22	121	17,5	67	4,5	33,5	M30×1,5	25	1,6	28,6*	1	0,5	2,3	27,8	A8×7×40	A8×7×40
50	30	35	30	25	84	55	22	139	17,5	67	4,5	35,5	M35×1,5	27	1,6	28,6*	1	0,5	2,3	32,8	A8×7×45	A8×7×40
63	40	50	45	40	114	65	28	179	20,75	93	3	54	M50×1,5	32	1,85	42,5*	1,5	1	2,3	47,8	A12×8×50	A12×8×50

* = d_6 h12

For SL/TL only

Dimensions																								Keyway to DIN6885	
Size d_0	d_5	d_4	d_{10}	d_{11}	d_{12}	B_1	B_2	B_3	B_4	B_5	B_6	B_7	B_9	d_8	G	G_1	m	d_6	ch_1	ch_2	b_a	d_7	$a^{N9} \times l \times b$	
	h_7	h_6		h_6	h_7	js_{12}		js_{12}	js_{12}	H_{11}	js_{12}				6g		+0,14 0	h_{11}/ h_{12}				h_{11}	fixed end (type 2A)	free end (type 5A)
25×20	15	17	/	17	15	66	30	16	96	13	46	4,5	0	21,6	M17×1	22	1,1	16,2	0,5	0,5	1,5	15,5	A5×5×25	A5×5×25
25×25	15	17	/	17	15	66	30	16	96	13	46	4,5	0	21,4	M17×1	22	1,1	16,2	0,5	0,5	1,5	15,5	A5×5×25	A5×5×25
32×20	17	20	21,5	17	15	69	30	16	99	13	46	4,5	2	27,3	M20×1	22	1,1	16,2	0,5	0,5	1,5	18,5	A5×5×25	A5×5×25
32×32	17	20	21,5	17	15	69	30	16	99	13	46	4,5	2	28,3	M20×1	22	1,1	16,2	0,5	0,5	1,5	18,5	A5×5×25	A5×5×25
32×40	17	20	21,5	17	15	69	30	16	99	13	46	4,5	2	26,8	M20×1	22	1,1	16,2	0,5	0,5	1,5	18,5	A5×5×25	A5×5×25
40×20	25	30	/	30	25	76	45	22	121	17,5	67	6,5	0	35,1	M30×1,5	25	1,6	28,6*	1	0,5	2,3	27,8	A8×7×40	A8×7×40
40×40	25	30	/	30	25	76	45	22	121	17,5	67	6,5	0	34,1	M40×1,5	25	1,6	28,6*	1	0,5	2,3	27,8	A8×7×40	A8×7×40
50×50	30	35	37	30	25	84	55	22	139	17,5	67	4,5	3	43,3	M35×1,5	27	1,6	28,6*	1	0,5	2,3	32,8	A8×7×45	A8×7×40

* = d_6 h12

Symbols, see **page 191**

Standard machining ends for nominal diameter ≥ 16 mm

Shaft threaded length = total shaft length - ends length.

Type 1A

For SL/TL only

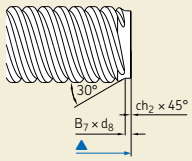

For other types

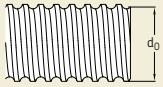

Type 2A

For SL/TL only

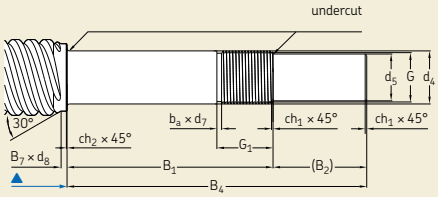

For other types

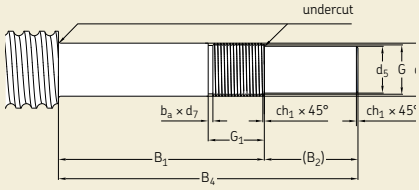

Type 3A

For SL/TL only

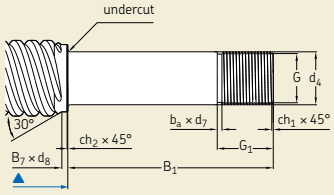

For other types

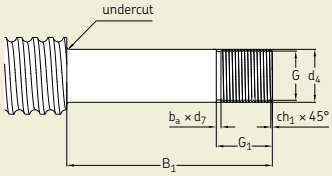

Type 4A

For SL/TL only

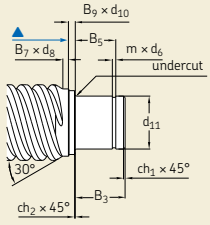

For other types

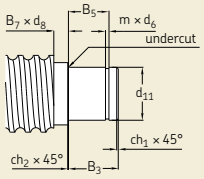

Type 5A

For SL/TL only

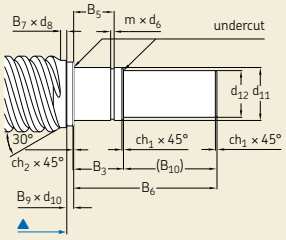

For other types

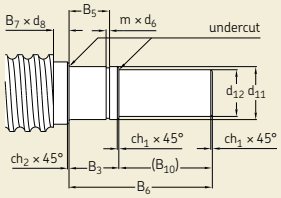

Keyway

For all types

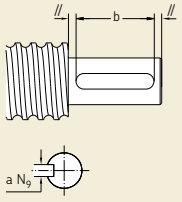

Keyway on request

For all types

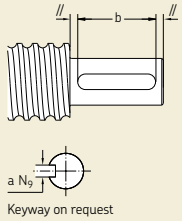

Keyway on request

▲ End of threaded screw length

Symbols, see **page 191**

3 Ball & roller screws

Precision rolled ball screws

PLBU support bearing

Accessories for screw shaft: fixed plummer housing with angular contact ball bearings (back-to-back arrangement).
Designed for standard end machining 2A or 3A

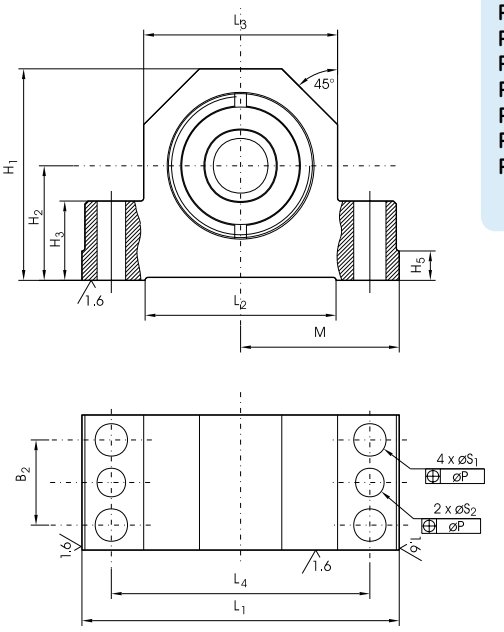

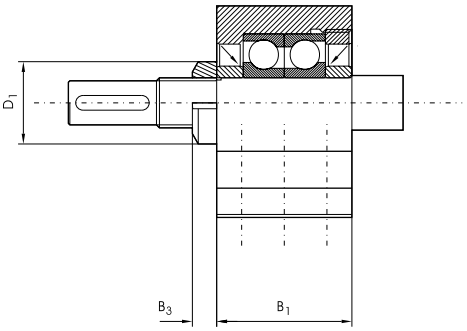

Designations	Dimensions								Basic load ratings dynamic	static
	d_0	B_1	B_2	H_1	H_2 JS8	L_1	L_4	S_1 H12	C_a	C_{oa}
	mm								kN	
PLBU 16	16	37	23	58	32	86	68	9	12,2	12,8
PLBU 20	20	42	25	64	34	94	77	9	13,3	14,7
PLBU 25	25	46	29	72	39	108	88	11	27,9	31,9
PLBU 32	32	49	29	77	45	112	92	11	24,6	31,9
PLBU 40	40	53	32	98	58	126	105	13	41,9	59,6
PLBU 50	50	59	35	112	65	144	118	13	54,5	79,8
PLBU 63	63	85	40	130	65	190	160	13	128	196,1

FLBU support bearing

Accessories for screw shaft: axially locating flanged housing with angular contact ball bearings (back-to-back arrangement).
Designed for standard end machining 2A or 3A

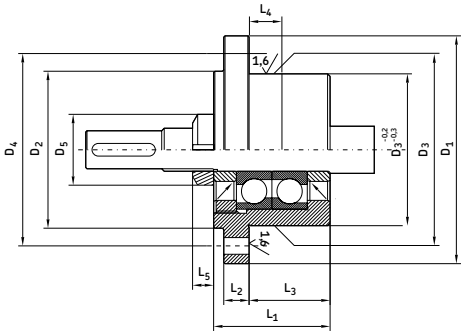

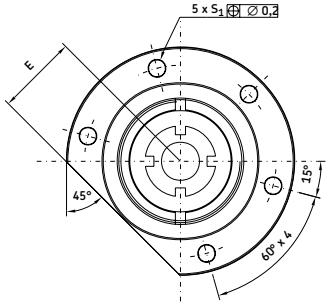

Designations	Dimensions							Basic load ratings dynamic	static
	d_0	D_1	D_3 h7	D_4	L_1	L_3	S_1 H13	C_a	C_{oa}
	mm							kN	
FLBU 16	16	76	47	63	37	22	6,6	12,2	12,8
FLBU 20	20	76	47	63	42	25	6,6	13,3	14,7
FLBU 25	25	90	60	76	46	32	6,6	27,9	31,9
FLBU 32	32	90	60	74	49	32	9	24,6	31,9
FLBU 40	40	120	80	100	53	32	11	41,9	59,6
FLBU 50	50	130	90	110	59	32	13	54,5	79,8
FLBU 63	63	165	124	146	85	43,5	13	128	196,1

Symbols, see **page 191**

BUF support bearing

Accessories for screw shaft: axially free pillow block with deep groove ball bearing. Designed for standard end machining 4A or 5A

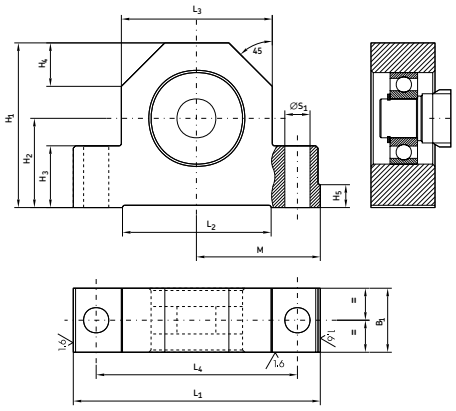

Designations	Dimensions							Basic load ratings dynamic	static
	d_0	B_1	H_1	H_2 js8	L_1	L_4	S_1 H12	C_a	C_{oa}
	mm							kN	
BUF 16	16	24	58	32	86	68	9	5,07	2,36
BUF 20	20	26	64	34	94	77	9	5,07	2,36
BUF 25	25	28	72	39	108	88	11	9,56	4,75
BUF 32	32	34	77	45	112	92	11	9,56	4,75
BUF 40	40	38	98	58	126	105	13	19,5	11,2
BUF 50	50	39	112	65	144	118	13	19,5	11,2
BUF 63	63	38	130	65	190	160	13	33,2	21,6

Symbols, see **page 191**

Ground ball screws

SKF offers a wide range of ground ball screws (**figs. 13** and **14**) which should meet all your requirements.

- Flanged nut with internal preload, DIN standard
- Single nut with axial play, DIN standard
- Single nut preloaded, end flange
- Double nut preloaded, end flange

Fig. 13

Fig. 14

N.B.:
In addition to this catalogue, all product brochures are available on **www.skf.com** *as PDF files.*

Please visit www.skf.com for latest update of SKF ball screw catalogue

Ordering key

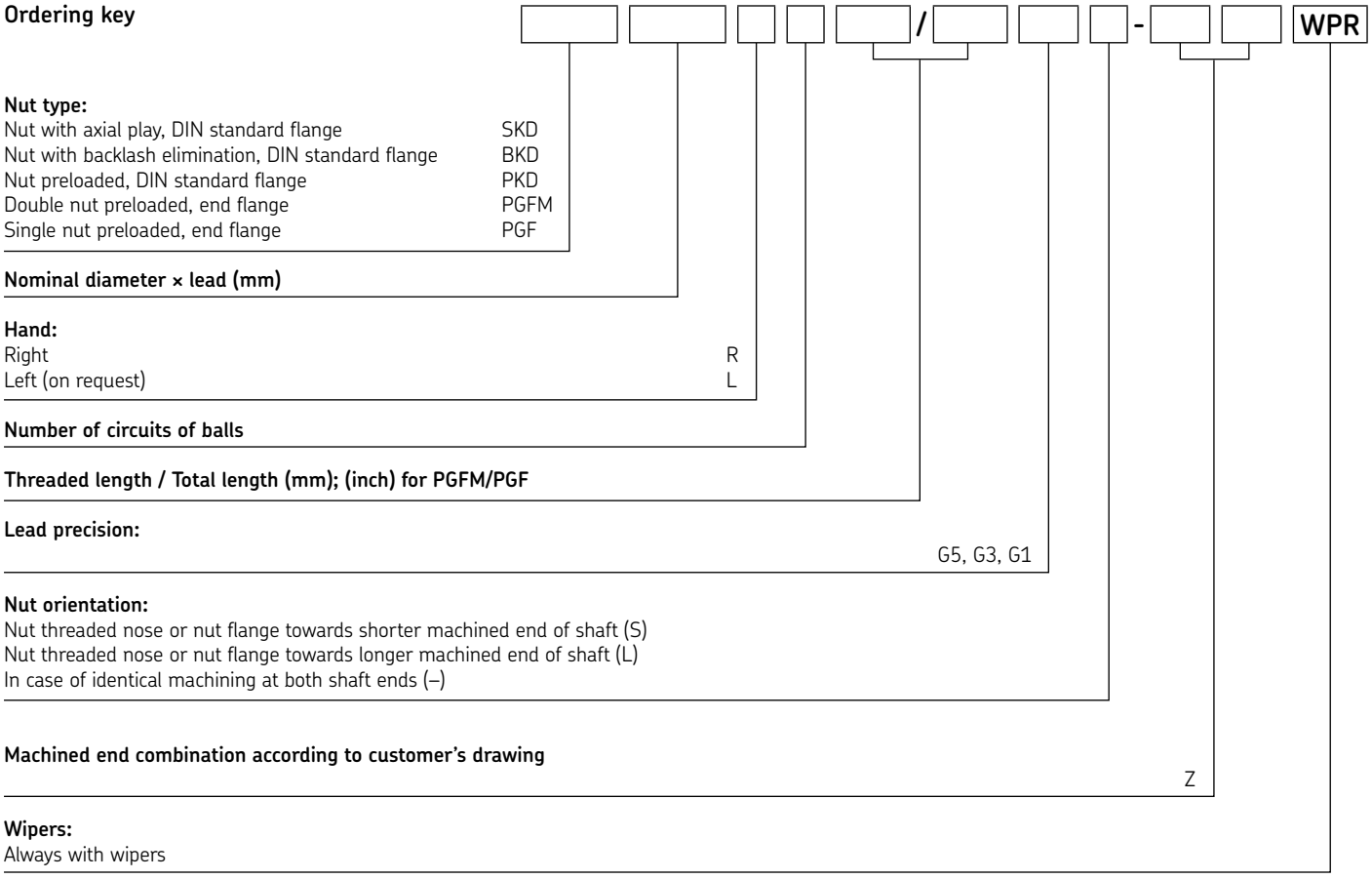

Nut type:
Nut with axial play, DIN standard flange SKD
Nut with backlash elimination, DIN standard flange BKD
Nut preloaded, DIN standard flange PKD
Double nut preloaded, end flange PGFM
Single nut preloaded, end flange PGF

Nominal diameter × lead (mm)

Hand:
Right R
Left (on request) L

Number of circuits of balls

Threaded length / Total length (mm); (inch) for PGFM/PGF

Lead precision:
G5, G3, G1

Nut orientation:
Nut threaded nose or nut flange towards shorter machined end of shaft (S)
Nut threaded nose or nut flange towards longer machined end of shaft (L)
In case of identical machining at both shaft ends (–)

Machined end combination according to customer's drawing
Z

Wipers:
Always with wipers

Example: PKD | 32×5 | R | 4 | 330 / 445 | G1 | L - HA | +K | WPR

Symbols, see **page 191**

3 Ball & roller screws
Ground ball screws

SKD/BKD

Single nut

SKD: nut with axial play
BKD: backlash elimination by oversized balls
Nut shape according to DIN standard

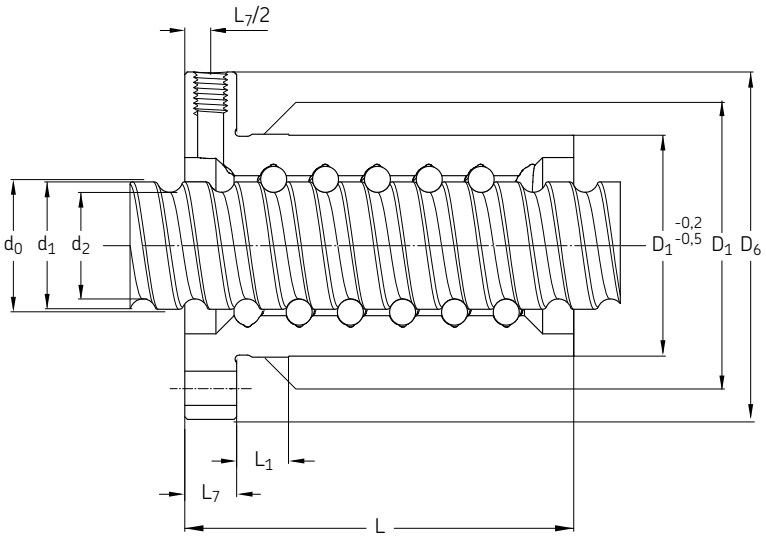

Designations	Nominal diameter	Lead	Dimensions									
	d_0	P_h	d_1	d_2	L	L_1	L_7	L_8 h13	D_1 g6	D_4	D_5 H13	D_6 h13
	mm											
SKD/BKD 16×5R	16	5	15,35	12,7	43,5	10	10	40	28	38	5,5	48
SKD/BKD 20×5R	20	5	19,5	16,7	44,5	10	10	44	36	47	6,6	58
SKD/BKD 25×5R	25	5	24,5	21,7	44,5	10	10	48	40	51	6,6	62
SKD/BKD 25×10R	25	10	24,7	20,6	75	10	10	48	40	51	6,6	62
SKD/BKD 32×5R	32	5	31,5	28,7	51,5	10	12	62	50	65	9	80
SKD/BKD 32×10R	32	10	31,95	27,8	64	10	12	62	50	65	9	80
SKD/BKD 40×5R	40	5	39,5	36,7	58,5	10	14	70	63	78	9	93
SKD/BKD 40×10R	40	10	39,4	34,1	91,0	20	14	70	63	78	9	93
SKD/BKD 50×5R	50	5	49,5	46,7	57	10	16	85	75	93	11	110
SKD/BKD 50×10R	50	10	49,4	44,1	93,0	10	16	85	75	93	11	110
SKD/BKD 63×5R	63	5	62,5	59,7	64	10	18	95	90	108	11	125
SKD/BKD 63×10R	63	10	62,4	57,1	95,0	10	18	95	90	108	11	125
SKD/BKD 80×10R	80	10	80	75,2	121	12	20	110	105	125	13,5	145

Symbols, see **page 191**

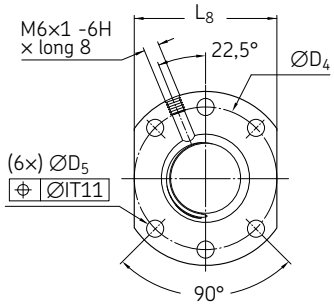

Design 1

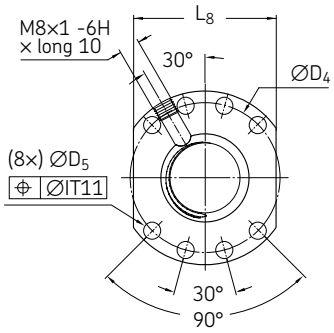

Design 2

Designations	Basic load ratings dynamic C_a	static C_{oa}	Number of circuits of balls	Design	Support bearing Recommended thrust support bearings	Recommended support pillow block
	kN		–			
SKD/BKD 16×5R	9,9	15,0	3	1	FLBU 16/PLBU 16	BUF 16
SKD/BKD 20×5R	13,3	22,6	3	1	PLBU 20/FLBU 20	BUF 20
SKD/BKD 25×5R	14,9	28,7	3	1	PLBU 25/FLBU 25	BUF 25
SKD/BKD 25×10R	28,5	49,4	4	1	PLBU 25/FLBU 25	BUF 25
SKD/BKD 32×5R	22,0	52,3	4	1	PLBU 32/FLBU 32	BUF 32
SKD/BKD 32×10R	25,7	49,4	3	1	PLBU 32/FLBU 32	BUF 32
SKD/BKD 40×5R	29,5	83,1	5	2	PLBU 40/FLBU 40	BUF 40
SKD/BKD 40×10R	74,6	157,2	5	2	PLBU 40/FLBU 40/FLRBU 4 (*)	BUF 40
SKD/BKD 50×5R	26,8	84,7	4	2		
SKD/BKD 50×10R	83,4	199,4	5	2	PLBU 50/FLBU 50/FLRBU 5 (*)	BUF 50
SKD/BKD 63×5R	29,3	106,9	4	2		
SKD/BKD 63×10R	94,6	262,2	5	2	PLBU 63/FLBU 63	BUF 63
SKD/BKD 80×10R	103,6	358,5	6	2		

* For high load applications, use FLRBU type. Please refer to end shaft and support bearing definitions, pages **188-190**

Symbols, see **page 191**

3 Ball & roller screws
Ground ball screws

PKD

Flanged nut with preload
Nut shape according to DIN Standard

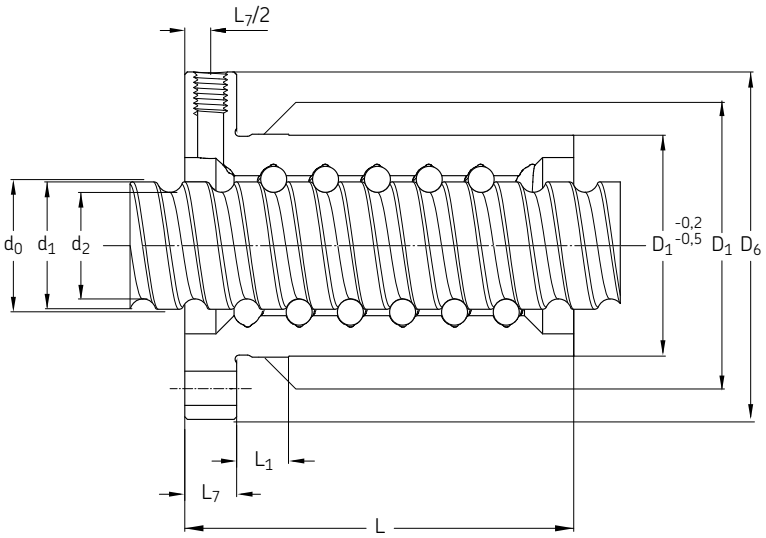

Designations	Nominal diameter	Lead	Dimensions									
	d_0	P_h	d_1	d_2	L	L_1	L_7	L_8 h13	D_1 g6	D_4	D_5 H13	D_6 h13
	mm											
PKD 16×5R	16	5	15,35	12,7	48	10	10	40	28	38	5,5	48
PKD 20×5R	20	5	19,5	16,7	50	10	10	44	36	47	6,6	58
PKD 25×5R	25	5	24,5	21,7	62	10	10	48	40	51	6,6	62
PKD 25×10R	25	10	24,7	20,6	75	10	10	48	40	51	6,6	62
PKD 32×5R	32	5	31,5	28,7	74	10	12	62	50	65	9	80
PKD 32×10R	32	10	31,95	27,8	100	10	12	62	50	65	9	80
PKD 40×5R	40	5	39,5	36,7	88	10	14	70	63	78	9	93
PKD 40×10R	40	10	39,4	34,1	130	20	14	70	63	78	9	93
PKD 50×5R	50	5	49,5	46,7	89	10	16	85	75	93	11	110
PKD 50×10R	50	10	49,4	44,1	151	10	16	85	75	93	11	110
PKD 63×5R	63	5	62,5	59,7	89	10	18	95	90	108	11	125
PKD 63×10R	63	10	62,4	57,1	153	10	18	95	90	108	11	125
PKD 80×20R	80	20	80	68,6	264	25	25	130	125	145	13,5	165

Symbols, see **page 191**

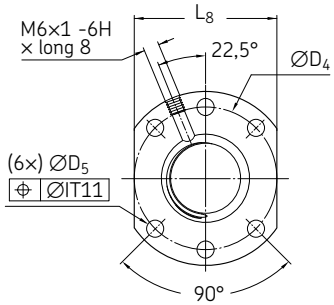

Design 1

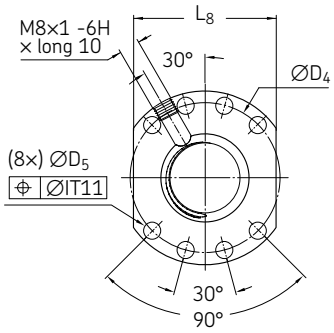

Design 2

Designations	Basic load ratings dynamic	static	Number of circuits of balls	Design	Support bearing Recommended thrust support bearings	Recommended support pillow block
	C_a	C_{oa}				
	kN		–			
PKD 16×5R	7,0	10,0	2×2	1	FLBU 16/PLBU 16	BUF 16
PKD 20×5R	9,4	15,1	2×2	1	FLBU 20/PLBU 20	BUF 20
PKD 25×5R	14,9	28,7	2×3	1	FLBU 25/PLBU 25	BUF 25
PKD 25×10R	15,7	24,7	2×2	1	FLBU 25/PLBU 25	BUF 25
PKD 32×5R	22,0	52,3	2×4	1	FLBU 32/PLBU 32	BUF 32
PKD 32×10R	25,7	49,4	2×3	1	FLBU 32/PLBU 32	BUF 32
PKD 40×5R	29,5	83,1	2×5	2	FLBU 40/PLBU 40	BUF 40
PKD 40×10R	61,6	125,8	2×4	2	FLBU 40/PLBU 40/FLRBU4(*)	BUF 40
PKD 50×5R	26,8	84,7	2×4	2		
PKD 50×10R	83,4	199,4	2×5	2	FLBU 50/PLBU 50/FLRBU5(*)	BUF 50
PKD 63×5R	29,3	106,9	2×4	2		
PKD 63×10R	94,6	262,2	2×5	2	FLBU 63/PLBU 63	BUF 63
PKD 80×20R	184,5	450,2	2×4	2		

* For high load applications, use FLRBU type. Please refer to end shaft and support bearing definitions, pages **188-190**

Symbols, see **page 191**

3 Ball & roller screws
Ground ball screws

Precision ground screw (fig. 15)

Screw diameter from 0,5 to 6 inches. Lead from 0,1 to 1 inch. Any lead metric or inch possible on request. Flange position and holes pattern can be adjusted upon request. Screw bearing support units FLRBU, FLBU, PLBU or BUF are compatible.

PGFM: double nut preloaded end flange
PGF: single nut preloaded end flange

Fig. 15

Designations	Screw diameter	Lead	Locating diameter	Flange diameter	Bolt circle	Double nut length	Flange thickness	Single nut length	Basic load ratings	
									dynamic	static
	d_0	P_h	D	D_1	J	A	A_2	A_5	C_a	C_{oa}
	in								lbf	
PGFM 0,5×0,1	0,5	0,1	1	1,875	1,437	2,25	0,437	1,35	1 204	2 270
PGFM 0,5×0,2	0,5	0,2	1,25	2,1255	1,687	3,625	0,437	2,225	137	3 302
PGFM 0,625×0,1	0,625	0,1	1,125	2	1,562	2,25	0,437	1,35	1 327	2 867
PGFM 0,625×0,2	0,625	0,2	1,375	2,25	1,812	3,5	0,437	1,9	1 213	5 205
PGFM 0,625×0,25	0,625	0,25	1,625	2,5	2,062	3,937	0,437	2,187	1 124	6 220
PGFM 0,75×0,1	0,75	0,1	1,25	2,25	1,75	2,25	0,437	1,35	1 457	3 559
PGFM 0,75×0,2	0,75	0,2	1,562	2,562	2,062	3,5	0,437	1,9	1 573	6 416
PGFM 0,75×0,25	0,75	0,25	1,625	2,625	2,125	3,937	0,437	2,187	1 804	876
PGFM 0,875×0,2	0,875	0,2	1,687	2,687	2,187	3,5	0,437	1,9	16	89
PGFM 0,875×0,25	0,875	0,25	1,75	2,75	2,25	3,937	0,437	2,187	1 163	9 357
PGFM 1,0×0,1	1	0,1	1,625	2,625	2,125	2,312	0,5	1,412	1 626	4 752
PGFM 1,0×0,2	1	0,2	1,812	2,812	2,312	3,562	0,5	1,962	1 262	9 223
PGFM 1,0×0,25	1	0,25	2,125	3,125	2,625	4,312	0,5	2,312	1 908	12 572
PGFM 1,25×0,2	1,25	0,2	2,062	3,062	2,562	3,562	0,5	1,962	1 698	11 648
PGFM 1,25×0,25	1,25	0,25	2,125	3,125	2,625	4	0,5	2,25	1 848	14 366
PGFM 1,25×0,5	1,25	0,5	2,5	3,5	3	7,125	0,5	3,812	1 147	20 759
PGFM 1,5×0,2	1,5	0,2	2,312	3,312	2,812	3,687	0,625	2,087	166	1 472
PGFM 1,5×0,25	1,5	0,25	3,562	3,562	3,062	4,437	0,625	2,437	1 802	20 656
PGFM 1,5×0,5	1,5	0,5	3,25	4,5	3,875	7,375	0,625	3,875	163	3 624
PGFM 1,75×0,2	1,75	0,2	2,625	3,875	3,25	3,812	0,75	2,212	1 474	16 887
PGFM 1,75×0,25	1,75	0,25	2,875	4,125	3,5	4,562	0,75	2,5	1 418	24 274
PGFM 1,75×0,5	1,75	0,5	3,5	4,75	4,125	7,5	0,75	4	1 276	43 286
PGFM 1,75×0,75	1,75	0,75	3,5	4,75	4,125	10,125	0,875	4,875	1 129	4 365
PGFM 2,0×0,2	2	0,2	2,937	4,187	3,562	3,182	0,75	2,212	1 757	19 310
PGFM 2,0×0,25	2	0,25	3,125	4,375	3,75	4,562	0,75	2,562	1 964	27 890
PGFM 2,0×0,5	2	0,5	3,75	5,5	4,625	7,5	0,75	3,812	1 180	50 548
PGFM 2,0×0,75	2	0,75	3,75	5,5	4,625	10,125	0,875	4,875	24 057	50 350
PGFM 2,0×1,0	2	1,75	3,75	5,5	4,625	11	1,25	6	18 375	36 723
PGFM 2,0×0,25	2,25	0,25	3,312	5	4,187	4,562	0,75	2,562	10 456	31 504

Symbols, see **page 191**

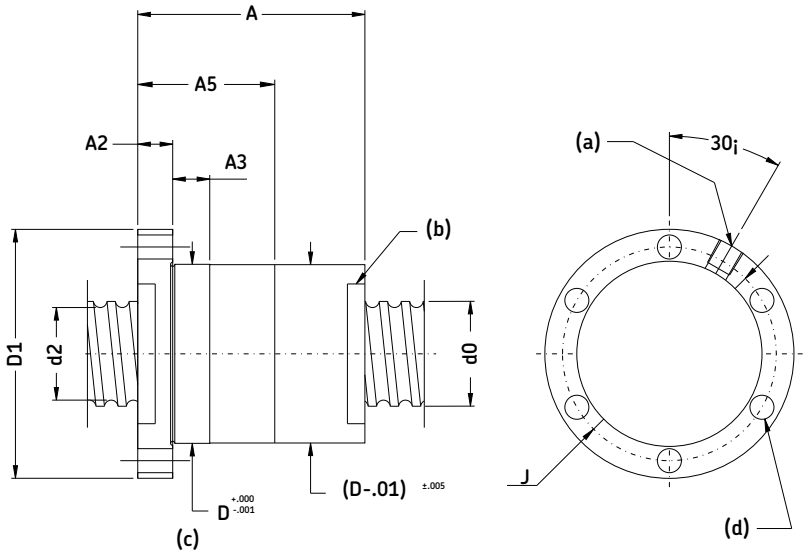

Legend:
(a) = 1/8-27 NPT (lube access)
(b) = wipers
(c) = optional
(d) = (Nh) D5 Dia. Thru

Designations	Screw diameter	Lead	Locating diameter	Flange diameter	Bolt circle	Double nut length	Flange thickness	Single nut length	Basic load ratings	
									dynamic	static
	d_0	P_h	D	D_1	J	A	A_2	A_5	C_a	C_{oa}
	in								lbf	
PGFM 2,25×0,5	2,25	0,5	4,125	5,875	5	7,5	0,75	4	25 853	57 810
PGFM 2,25×0,75	2,25	0,75	4,125	5,875	5	10,125	0,875	4,875	25 749	57 631
PGFM 2,25×1,0	2,25	1	4,125	5,875	5	13	1,25	7	26 599	60 759
PGFM 2,5×0,25	2,5	0,25	3,625	5,375	4,5	4,562	0,75	2,562	11 089	35 996
PGFM 2,5×0,5	2,5	0,5	4,375	6,375	5,375	7,5	0,75	4	27 349	65 072
PGFM 2,5×0,75	2,5	0,75	4,375	6,375	5,375	10,125	0,875	4,875	28 208	68 325
PGFM 2,5×1,0	2,5	1	5,25	7,25	6,25	14,5	1,25	7	38 815	83 037
PGFM 3,0×0,25	3	0,25	4,125	6,15	5,125	4,687	0,875	2,687	11 880	43 226
PGFM 3,0×0,5	3	0,5	4,812	6,812	5,812	7,625	0,875	4,125	30 815	83 057
PGFM 3,0×0,75	3	0,75	5,75	7,75	6,75	11,375	0,875	6,125	43 353	102 706
PGFM 3,0×1,0	3	1	5,75	7,75	6,75	14,5	1,25	7,5	43 216	102 455
PGFM 3,5×0,5	3,5	0,5	5,375	7,375	6,375	7,75	1	4,25	32 975	97 605
PGFM 3,5×0,75	3,5	0,75	5,875	7,875	6,875	11,5	1	6,25	48 593	128 184
PGFM 3,5×1,0	3,5	1	6,5	8,5	7,5	14,75	1,25	7,75	62 805	150 171
PGFM 4,0×0,5	4	0,5	5,875	7,875	6,875	8	1,25	4,5	34 886	112 145
PGFM 4,0×0,75	4	0,75	6,75	8,75	7,75	11,75	1,25	6,5	51 693	147 601
PGFM 4,0×1,0	4	1	7	9	8	14,75	1,25	7,75	69 004	180 105
PGFM 5,0×0,5	5	0,5	6,75	8,75	7,75	8	1,25	4,5	38 194	141 214
PGFM 5,0×0,75	5	0,75	7,75	9,75	8,75	11,75	1,25	6,875	56 974	186 401
PGFM 5,0×1,0	5	1	8	10	9	14,75	1,25	7,75	77 221	230 571
PGFM 6,0×0,5	6	0,5	7,75	9,75	8,75	8	1,25	4,5	41 600	173 819
PGFM 6,0×0,75	6	0,75	8,75	10,75	9,75	11,75	1,25	6,5	61 435	225 174
PGFM 6,0×1,0	6	1	9	11	10	14,75	1,25	7,75	84 043	281 022

Symbols, see **page 191**

Applications

In response to our customer's ultimate need to produce more with less, SKF has combined its knowledge and experience with the latest technology to develop solutions for your specific conditions. Whether your goal is to design equipment that provides more customer value, or to increase overall profitability, with SKF experience and expertise, you are likely to find a real solution.

Machine tool

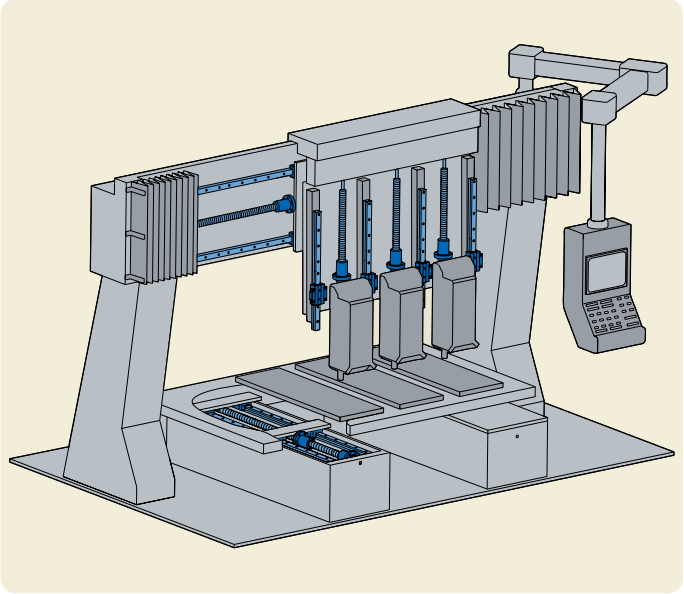

Components application
a) Ground ball screws

Textile machine

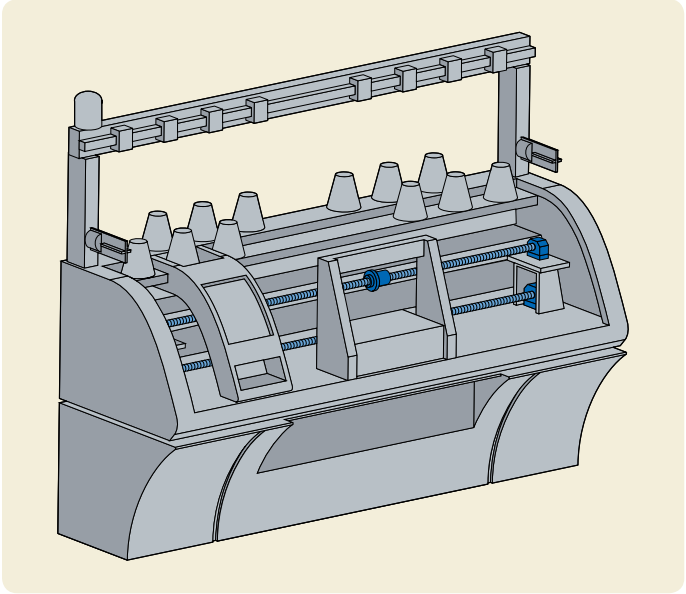

Components application
a) Precision rolled ball screws

Electroerosion

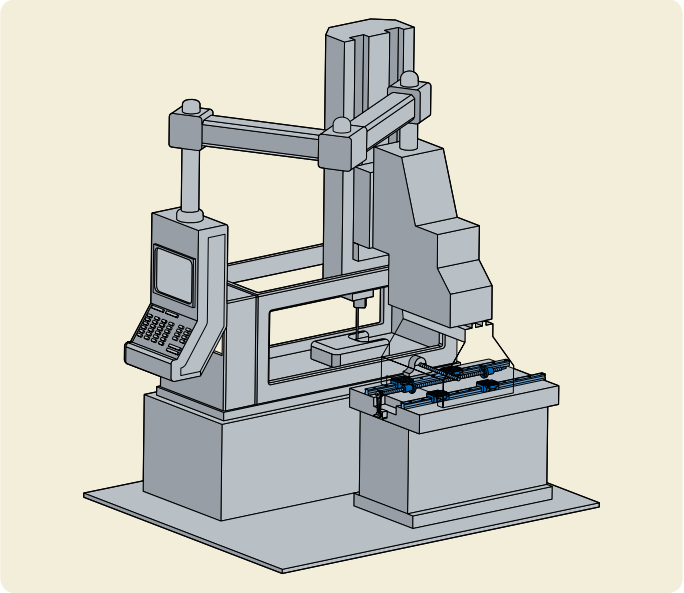

Components application
a) Precision rolled ball screws
b) Profile rail guides

Laboratory automation equipment

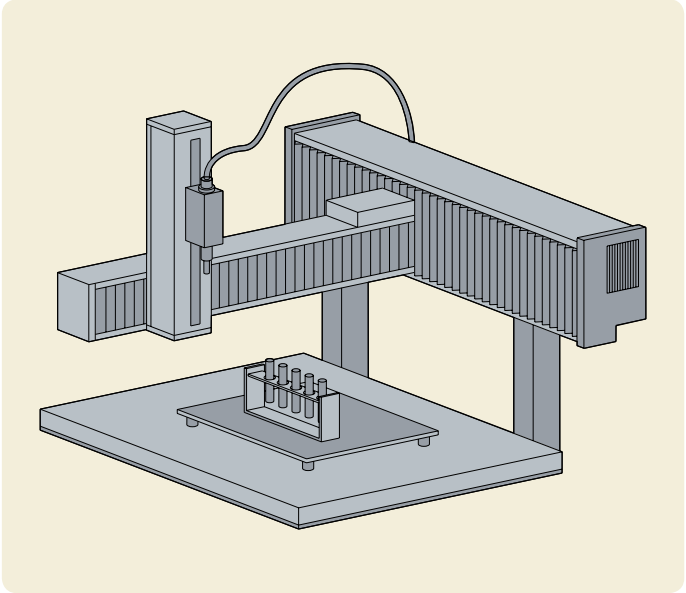

Components application
a) Miniature precision rolled ball screws

Roller screws

There are two non-competing designs to cover application requirements beyond ball screw limitations. Load transfers from the nut to the screw shaft through a number of threaded or grooved rollers: the resulting large number of contact points ensures a much higher load carrying capacity and a much longer service life than ball screws of similar size.

"SR" Planetary roller screws
(**fig. 16**)
Non-recirculating rollers yield high speed and acceleration capabilities, exceptional reliability and resistance to adverse environments.

"SV" Recirculating roller screws
(**fig. 17**)
Very fine lead of thread (0,6 mm) allows high positioning accuracy, repeatability and exceptional axial stiffness.

Fig. 16

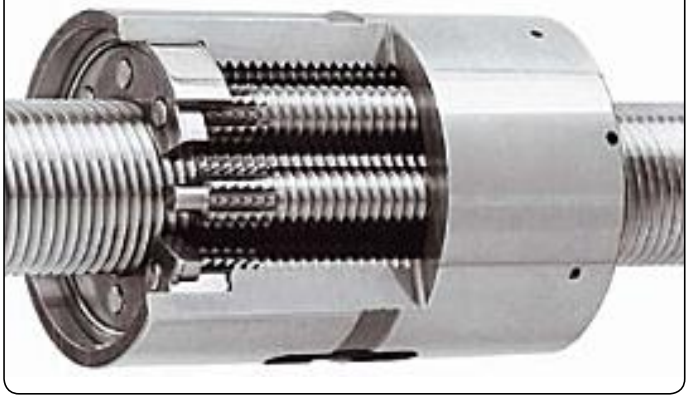

SR planetary roller screw

Fig. 17

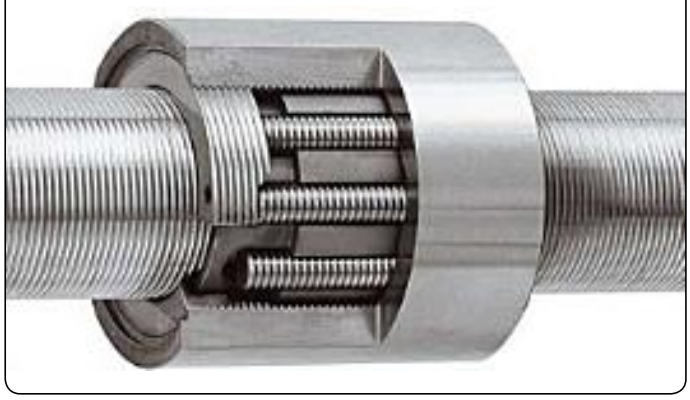

SV recirculating roller screw

Type	Features
SR	Higher static load carrying capacity up to 16 100 kN
SR	Higher dynamic load carrying capacity up to 3 200 kN
SR	Higher rotational speed - ∅ 48 up to 3 000 rpm
SR	Higher acceleration up to 12 000 rad/sec^2
SR	Shock loads
SR	Adverse environments (dust, ice, sand)
SV	Small lead down to 0,6 mm
SR SV	Stainless steel optional

Fig. 18

ISR inverted roller screw

Ten reasons for using roller screws

- High load ratings (SR)
- Very high rotational speed (SR)
- High acceleration and deceleration rates (SR)
- Long life at high cycle rates (SR)
- High reliability (SR-SV)
- Resistance to hostile environments (SR)
- Ability to accommodate shock loads (SR)
- Small displacements with very good repeatability (SV)
- Rotating nut when speed becomes critical (SR)
- Frequent removal of the nut from the screw shaft (all SR sizes, most SV sizes)

N.B.:
In addition to this catalogue, all product brochures are available on **www.skf.com** *as PDF files.*

Please visit www.skf.com for latest update of SKF roller screws catalogue

3 Ball & roller screws
Roller screws

Planetary roller screws
(**fig. 19**)

Threaded rollers accomplish a pure rolling motion inside the nut.

Features
- Many strong contact surfaces for load distribution
- Non-recirculating rollers
- No weak point in the nut

Benefits
- Long service life from the high load carrying capacity
- Robust and shock resistant
- Exceptional reliability
- High speed & acceleration capabilities

Maximum speed
For screw assembly BRC + FLRBU, the maximum speed is defined by the product $n \times d_0$.

$n \times d_0 < 160\,000$ for BRC

(n = rotational speed, in rpm
d_0 = outside diameter of screw shaft, mm)

Fig. 19

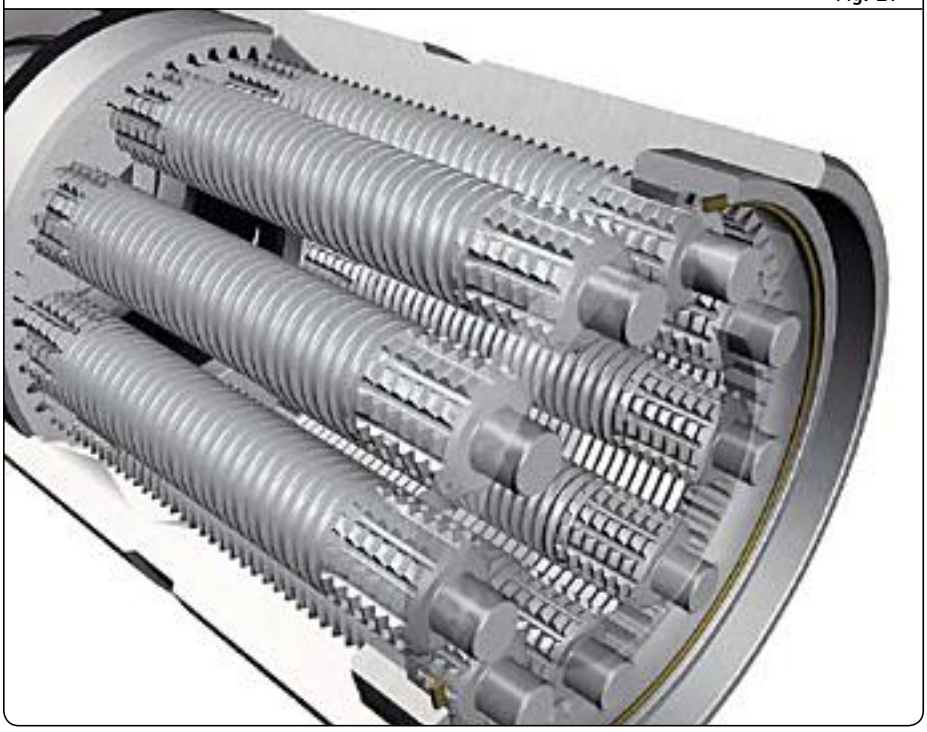

Typical applications
The capacity to carry heavy loads for thousands of hours in the most arduous conditions makes planetary roller screws suitable for the most demanding applications. The nut can withstand shock loads and the timing mechanism is robust in harsh environments, at high speeds and at high accelerations. The possible long lead permits high linear speeds.

Application examples
- Heavy duty machine tool (forming and stamping presses and broaching machines)
- Injection moulding and blow moulding
- Factory automation process including spot welding, clamping, guns, etc...
- Test benches
- Steel industry
- Tyre industry
- Automatic handling
- Civil and military aircrafts, aerospace, defense, marine
- Nuclear industry
- Transportation industry
- Oil and gas

Recirculating roller screws
(**fig. 20**)

Fig. 20

Grooved rollers offer the unique combination of small lead, high load carrying capacity and high axial stiffness.

Features
- Many strong contact surfaces for load distribution
- Very small leads (down to 0,6 mm)
- No miniature parts

Benefits
- Long service life from the high load carrying capacity
- High positioning accuracy: fine resolution
- Exceptional reliability

Maximum speed
For screw assembly BVC + FLRBU, the maximum speed is defined by the product $n \times d_0$.

$n \times d_0 < 20\,000$ for BVC $\varnothing > 25$

$n \times d_0 < 30\,000$ for BVC $\varnothing \leq 25$

(n = rotational speed, in rpm

d_0 = outside diameter of screw shaft, mm)

Typical applications
Ultimate positioning accuracy can be obtained using the fine lead of SV/BV/PV recirculating roller screws.
Their great mechanical advantage minimizes input torque and increases positioning resolution. They can simplify a complete transmission design and improve its rigidity. They are often used in applications of advanced technology where reliable optimum performance is essential.

Application examples
- Grinding machines
- Laboratory equipment
- Paper-making
- Printing industry
- Telescopes
- Satellites
- Medical equipment
- Defense
- Oil and gas

Notes

Ordering key

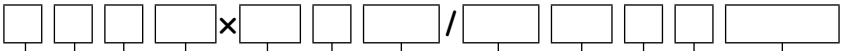

Play or preload:
Axial play (standard range) S
Preload by rollers to eliminate backlash B
Nut preloaded for optimum rigidity P
Ultra Power H

Product:
Planetary roller screw R
Recirculating roller screw V

Nut type:
Cylindrical nut with axial play C
Nut with central flange and axial play F
Preloaded cylindrical nut U
Preloaded nut with central flange K
Off-centered flange (Ultra Power range only) P

Nominal diameter × lead (mm)

Hand :
Right R
Left (on request) L

Threaded length, total length (mm)

Lead precision:
G1 - G3 - G5

Nut orientation:
This applies to flanged nuts of types SRF, PRK and PVK
Nut ground outer diameter with g6 tolerance oriented towards:
Shorter machined end S
Longer machined end L
For other types of nuts –

Shaft ends:
To customer's drawing Z

Wipers:
Wipers in the nut: mounted for SR, delivered separately for SVC WPR
Without wipers NOWPR
Nut without wiper recesses (non-standard SR only) X

Example 1: S R F 39 × 20 R 425 / 590 G1 L Z WPR

Example 2: S R F 39 × 20 R 425 / 590 G5 L Z NOWPR

Symbols, see **page 191**

3 Ball & roller screws
Roller screws

SRC/BRC - Range

Cylindrical nut with axial play/with backlash elimination

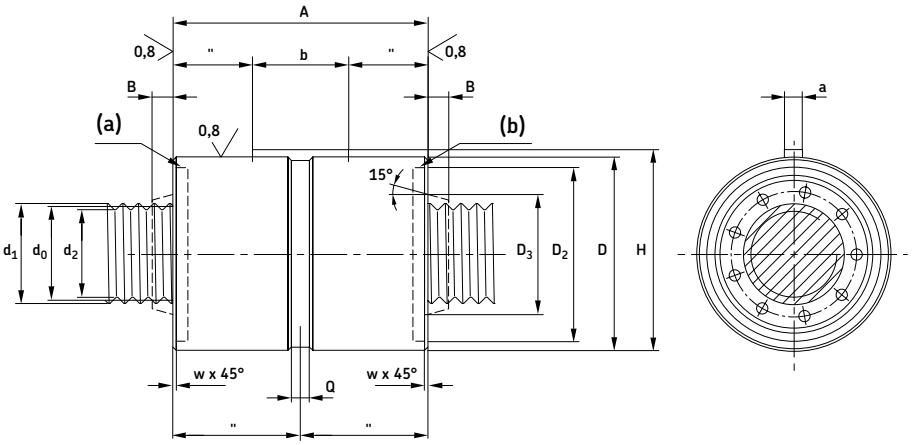

Legend:
(a) = wiper recess
(b) = wiper on request

Symbols, see **page 191**

Designations	Dimensions													Basic load ratings	
	Lead													dynamic	static
	d_0	P_h	l_{tp}	s_{ap}	d_1	d_2	D g6/H7	A h12	a h9	b	B	H	Q	C_a	C_{oa}
	mm													kN	
SRC/BRC 8×1,6	8	1,6	500	0,02	8,2	7,5	21	31	3	10	–	22,3	5	7,4	13,4
SRC/BRC 8×2	8	2	500	0,02	8,2	7,5	21	31	3	10	–	22,3	5	7,8	13,4
SRC/BRC 8×4	8	4	500	0,02	8,4	7,3	25	44	4	12	3	26,5	5	11,24	19,59
SRC/BRC 12×2	12	2	750	0,02	12,2	11,6	26	31	3	10	–	27,3	5	10,6	16
SRC/BRC 12×5	12	5	750	0,02	12,4	11,3	30	44	4	12	3	31,5	5	17,73	26,71
SRC/BRC 15×2	15	2	975	0,02	15,2	14,6	34	35	4	14	–	35,7	5	14,8	24,4
SRC/BRC 15×5	15	5	975	0,02	15,4	14,3	35	50	4	16	3	36,5	5	25,95	43,59
SRC/BRC 15×8	15	8	975	0,02	15,5	14	35	50	4	16	3	36,5	5	27,43	40,78
SRC/BRC 20×6	20	6	1 300	0,02	20,4	19,3	40	50	4	16	4	41,5	5	26,83	44,86
SRC/BRC 21×2	21	2	1400	0,02	21,2	20,6	45	64	5	20	4	47	5	41	82,8
SRC/BRC 21×5	21	5	1 400	0,02	21,4	20,3	45	64	5	20	4	47	5	50,55	81,97
SRC/BRC 21×6	21	6	1 400	0,02	21,4	20,3	45	64	5	20	4	47	5	52,77	82,18
SRC/BRC 21×8	21	8	1 400	0,02	21,5	20	45	64	5	20	4	47	5	54,44	78,06
SRC/BRC 21×10	21	10	1 400	0,04	21,8	19,7	45	64	5	20	4	47	5	59,24	83,01
SRC/BRC 24×6	24	6	1 600	0,02	24,4	23,3	48	58	5	20	6	50	5	42,3	65,17
SRC/BRC 24×12	24	12	1 600	0,04	24,8	22,7	48	58	5	20	6	50	5	47,65	62,34
SRC/BRC 25×5	25	5	1 650	0,02	25,4	24,3	53	78	6	25	6	55,5	5	63,25	108,23
SRC/BRC 25×10	25	10	1 650	0,04	25,8	23,7	53	78	6	25	6	55,5	5	72,63	105,31
SRC/BRC 25×15	25	15	1 650	0,07	26,2	23,1	53	78	6	25	6	55,5	5	79,17	106,39
SRC/BRC 30×5	30	5	2 000	0,02	30,4	29,3	64	85	6	32	7	66,5	5	91,98	178,32
SRC/BRC 30×6	30	6	2 000	0,02	30,4	29,3	64	85	6	32	7	66,5	5	95	175,34
SRC/BRC 30×10	30	10	2 000	0,04	30,8	28,7	64	85	6	32	7	66,5	5	106,32	174,36
SRC/BRC 30×20	30	20	2 000	0,07	31,5	27,5	64	85	6	32	7	66,5	5	123,28	177,28
SRC/BRC 36×6	36	6	2 400	0,02	36,4	35,3	68	80	5	25	8	70	5	90,45	179,39
SRC/BRC 36×9	36	9	2 400	0,02	36,5	35,1	68	80	5	25	8	70	5	97,52	174,05
SRC/BRC 36×12	36	12	2 400	0,04	36,8	34,7	68	80	5	25	8	70	5	106,6	181,1
SRC/BRC 36×18	36	18	2 400	0,07	37,2	34,1	68	80	5	25	8	70	5	114,14	176,57
SRC/BRC 36×24	36	24	2 400	0,07	37,5	33,5	68	80	5	25	8	70	5	123,6	184,38
SRC/BRC 39×5	39	5	2 650	0,02	39,4	38,3	80	100	8	40	8	83	7	129,21	268,92
SRC/BRC 39×10	39	10	2 650	0,04	39,8	37,7	80	100	8	40	8	83	7	152,62	270,93
SRC/BRC 39×15	39	15	2 650	0,07	40,2	37,1	80	100	8	40	8	83	7	167,64	272,89
SRC/BRC 39×20	39	20	2 650	0,07	40,5	36,5	80	100	8	40	8	83	7	172,82	260,89
SRC/BRC 39×25	39	25	2 650	0,07	40,9	35,9	80	100	8	40	8	83	7	174,79	249
SRC/BRC 44×8	44	8	3 000	0,04	44,4	43,2	80	90	6	32	8	82,5	7	130,48	261,47
SRC/BRC 44×12	44	12	3 000	0,04	44,8	42,7	80	90	6	32	8	82,5	7	143,71	262,87
SRC/BRC 44×18	44	18	3 000	0,07	45,2	42,1	80	90	6	32	8	82,5	7	157,74	264,94
SRC/BRC 44×24	44	24	3 000	0,07	45,5	41,5	80	90	6	32	8	82,5	7	167,81	266,95
SRC/BRC 44×30	44	30	3 000	0,07	45,9	40,9	80	90	6	32	8	82,5	7	165,86	246,44

Continued

SRC/BRC - Range
(*Continued*)

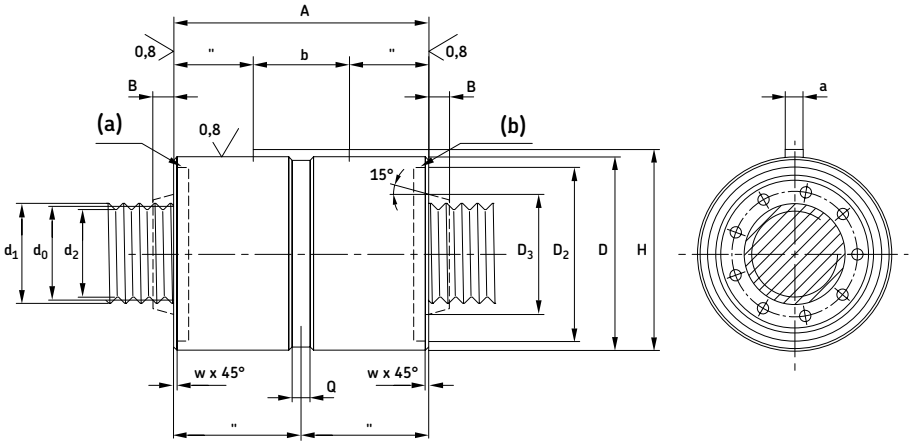

Legend:
(a) = wiper recess
(b) = wiper on request

Symbols, see **page 191**

Designations	Dimensions													Basic load ratings	
	Lead													dynamic	static
	d_0	P_h	l_{tp}	s_{ap}	d_1	d_2	D g6/H7	A h12	a h9	b	B	H	Q	C_a	C_{oa}
	mm													kN	
SRC/BRC 48×5	48	5	3 300	0,02	48,4	47,3	100	127	8	45	9	103	7	198,08	481,53
SRC/BRC 48×8	48	8	3 300	0,04	48,6	47,1	100	127	8	45	9	103	7	218,43	470,61
SRC/BRC 48×10	48	10	3 300	0,04	48,8	46,7	100	127	8	45	9	103	7	231,54	475,11
SRC/BRC 48×15	48	15	3 300	0,07	49,2	46,1	100	127	8	45	9	103	7	257,75	486,36
SRC/BRC 48×20	48	20	3 300	0,07	49,5	45,5	100	127	8	45	9	103	7	265,69	462,27
SRC/BRC 48×25	48	25	3 300	0,07	49,9	44,9	100	127	8	45	9	103	7	285,86	491,04
SRC/BRC 56×12	56	12	4 000	0,04	56,8	54,7	100	112	8	40	9	103	7	212,17	433,12
SRC/BRC 56×24	56	24	4 000	0,07	57,5	53,5	100	112	8	40	9	103	7	242,22	419,15
SRC/BRC 56×36	56	36	4 000	0,07	58,3	52,3	100	112	8	40	9	103	7	258,33	424,24
SRC/BRC 60×10	60	10	4 250	0,04	60,8	58,7	122	152	10	45	9	125	10,5	338,57	779,69
SRC/BRC 60×15	60	15	4 250	0,07	61,2	58,1	122	152	10	45	9	125	10,5	373,06	782,69
SRC/BRC 60×20	60	20	4 250	0,07	61,5	57,5	122	152	10	45	9	125	10,5	394,97	785,66
SRC/BRC 64×12	64	12	4 600	0,04	64,8	62,7	115	129	8	45	11	118	7	296,38	763,3
SRC/BRC 64×18	64	18	4 600	0,07	65,2	62,1	115	129	8	45	11	118	7	316,72	725,56
SRC/BRC 64×24	64	24	4 600	0,07	65,5	61,5	115	129	8	45	11	118	7	328,93	689,62
SRC/BRC 64×30	64	30	4 600	0,07	65,9	60,9	115	129	8	45	11	118	7	318,15	619,84
SRC/BRC 64×36	64	36	4 600	0,07	66,3	60,3	115	129	8	45	11	118	7	309,12	589,38
SRC 75×10	75	10	5 500	0,04	75,8	73,7	150	191	10	63	10	153	10,5	504,86	1 486,68
SRC 75×15	75	15	5 500	0,07	76,2	73,1	150	191	10	63	10	153	10,5	561,29	1 491,3
SRC 75×20	75	20	5 500	0,07	76,5	72,5	150	191	10	63	10	153	10,5	572,26	1 495,87
SRC 80×12	80	12	6 000	0,04	80,8	78,7	140	156	10	63	12	143	10,5	410,27	1 163,16
SRC 80×18	80	18	6 000	0,07	81,2	78,1	140	156	10	63	12	143	10,5	455,94	1 167,63
SRC 80×24	80	24	6 000	0,07	81,5	77,5	140	156	10	63	12	143	10,5	485,8	1 172,06
SRC 80×36	80	36	6 000	0,07	82,3	76,3	140	156	10	63	12	143	10,5	442,89	999,09
SRC 80×42	80	42	6 000	0,07	82,7	75,7	140	156	10	63	12	143	10,5	425,64	932,95
SRC 99×20	99	20	7 500	0,07	100,5	96,5	200	260	16	100	12	204	15	924,86	3 090,44
SRC 100×24	100	24	8 000	0,07	101,5	97,5	180	195	10	63	12	183	10,5	655,81	1 825,82
SRC 120×24	120	24	8 000	0,07	121,5	117,5	220	240	16	100	12	224	15	915,02	3 027,05
SRC 120×25	120	25	8 000	0,07	121,8	116,9	240	280	16	100	12	244	15	1 127,43	4 037,97
SRC 150×25	150	25	7 200	0,07	151,9	146,9	320	400	32	160	13	327	15	1 596,53	6 816,05
SRC 150×36	150	36	7 200	0,07	152,3	146,3	280	305	16	100	13	284	15	1 156,92	4 108,09
SRC 180×30	180	30	5 000	0,07	182,3	176,3	420	515	32	160	13	427	20	1 962,34	9 069,02
SRC 210×30	210	30	3 700	0,07	212,3	206,3	480	550	40	200	20	489	20	2 295,6	11 375,26

3 Ball & roller screws

Roller screws

SRF/BRF - Range

Flanged nut with axial play/with backlash elimination

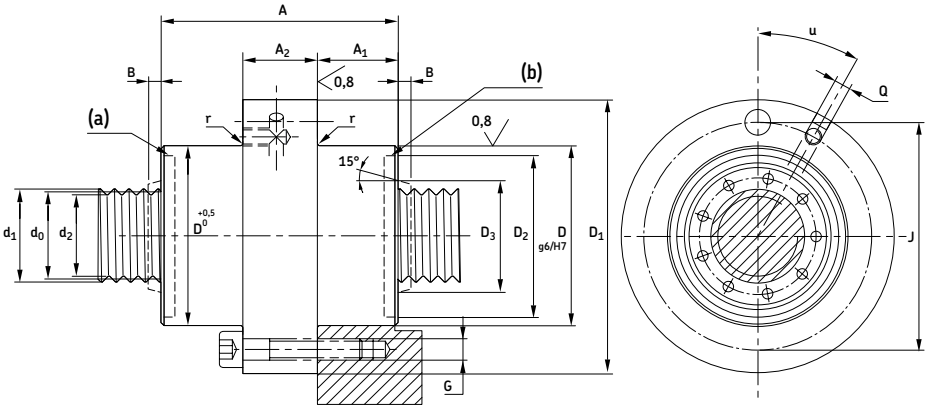

Legend:
(a) = wiper recess
(b) = wiper on request

Symbols, see **page 191**

Designations	Dimensions													Basic load ratings	
	Lead													dynamic	static
	d_0	P_h	l_{tp}	s_{ap}	d_1	d_2	D	A h12	D_1	J js12	G	Q	u	C_a	C_{oa}
	mm												[°]	kN	
SRF/BRF 8×1,6	8	1,6	500	0,02	8,2	7,5	21	31	42	32	6×M4	M6	30	7,4	13,4
SRF/BRF 8×2	8	2	500	0,02	8,2	7,5	21	31	42	32	6×M4	M6	30	7,8	13,4
SRF/BRF 8×4	8	4	500	0,02	8,4	7,3	25	44	46	36	6×M4	M6	30	11,24	19,59
SRF/BRF 12×2	12	2	750	0,02	12,2	11,6	26	31	47	37	6×M4	M6	30	10,6	16
SRF/BRF 12×5	12	5	750	0,02	12,4	11,3	30	44	51	41	6×M4	M6	30	17,73	26,71
SRF/BRF 15×2	15	2	975	0,02	15,2	14,6	34	35	55	45	6×M4	M6	30	14,8	24,4
SRF/BRF 15×5	15	5	975	0,02	15,4	14,3	35	50	58	46	6×M5	M6	30	25,95	43,59
SRF/BRF 15×8	15	8	975	0,02	15,5	14	35	50	58	46	6×M5	M6	30	27,43	40,78
SRF/BRF 20×6	20	6	1 300	0,02	20,4	19,3	40	50	63	51	6×M5	M6	30	26,83	44,86
SRF/BRF 21×2	21	2	1 400	0,02	21,2	20,6	45	64	66	56	6×M5	M6	30	41	82,8
SRF/BRF 21×5	21	5	1 400	0,02	21,4	20,3	45	64	68	56	6×M5	M6	30	50,55	81,97
SRF/BRF 21×6	21	6	1 400	0,02	21,4	20,3	45	64	68	56	6×M5	M6	30	52,77	82,18
SRF/BRF 21×8	21	8	1 400	0,02	21,5	20	45	64	68	56	6×M5	M6	30	54,44	78,06
SRF/BRF 21×10	21	10	1 400	0,04	21,8	19,7	45	64	68	56	6×M5	M6	30	59,24	83,01
SRF/BRF 24×6	24	6	1 600	0,02	24,4	23,3	48	58	71	59	6×M5	M6	30	42,3	65,17
SRF/BRF 24×12	24	12	1 600	0,04	24,8	22,7	48	58	71	59	6×M5	M6	30	47,65	62,34
SRF/BRF 25×5	25	5	1 650	0,02	25,4	24,3	56	78	84	70	6×M6	M6	30	63,25	108,23
SRF/BRF 25×10	25	10	1 650	0,04	25,8	23,7	56	78	84	70	6×M6	M6	30	72,63	105,31
SRF/BRF 25×15	25	15	1 650	0,07	26,2	23,1	56	78	84	70	6×M6	M6	30	79,17	106,39
SRF/BRF 30×5	30	5	2 000	0,02	30,4	29,3	64	85	97	81	6×M8	M6	30	91,98	178,32
SRF/BRF 30×6	30	6	2 000	0,02	30,4	29,3	64	85	97	81	6×M8	M6	30	95	175,34
SRF/BRF 30×10	30	10	2 000	0,04	30,8	28,7	64	85	97	81	6×M8	M6	30	106,32	174,36
SRF/BRF 30×20	30	20	2 000	0,07	31,5	27,5	64	85	97	81	6×M8	M6	30	123,28	177,28
SRF/BRF 36×6	36	6	2 400	0,02	36,4	35,3	68	80	102	85	6×M8	M6	30	90,45	179,39
SRF/BRF 36×9	36	9	2 400	0,02	36,5	35,1	68	80	102	85	6×M8	M6	30	97,52	174,05
SRF/BRF 36×12	36	12	2 400	0,04	36,8	34,7	68	80	102	85	6×M8	M6	30	106,6	181,1
SRF/BRF 36×18	36	18	2 400	0,07	37,2	34,1	68	80	102	85	6×M8	M6	30	114,14	176,57
SRF/BRF 36×24	36	24	2 400	0,07	37,5	33,5	68	80	102	85	6×M8	M6	30	123,6	184,38
SRF/BRF 39×5	39	5	2 650	0,02	39,4	38,3	82	100	124	102	6×M10	M6	30	129,21	268,92
SRF/BRF 39×10	39	10	2 650	0,04	39,8	37,7	82	100	124	102	6×M10	M6	30	152,62	270,93
SRF/BRF 39×15	39	15	2 650	0,07	40,2	37,1	82	100	124	102	6×M10	M6	30	167,64	272,89
SRF/BRF 39×20	39	20	2 650	0,07	40,5	36,5	82	100	124	102	6×M10	M6	30	172,82	260,89
SRF/BRF 39×25	39	25	2 650	0,07	40,9	35,9	82	100	124	102	6×M10	M6	30	174,79	249
SRF/BRF 44×8	44	8	3 000	0,04	44,4	43,2	82	90	124	102	6×M10	M6	30	130,48	261,47
SRF/BRF 44×12	44	12	3 000	0,04	44,8	42,7	82	90	124	102	6×M10	M6	30	143,71	262,87
SRF/BRF 44×18	44	18	3 000	0,07	45,2	42,1	82	90	124	102	6×M10	M6	30	157,74	264,94
SRF/BRF 44×24	44	24	3 000	0,07	45,5	41,5	82	90	124	102	6×M10	M6	30	167,81	266,95
SRF/BRF 44×30	44	30	3 000	0,07	45,9	40,9	82	90	124	102	6×M10	M6	30	165,86	246,44

Continued

SRF/BRF - Range
(*Continued*)

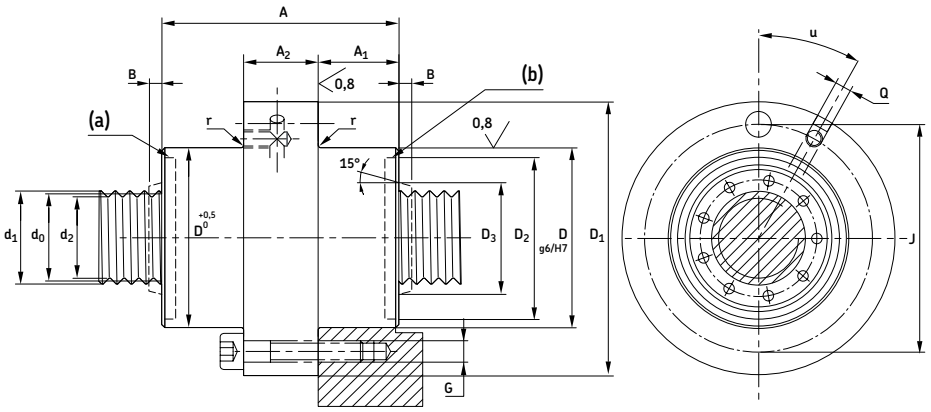

Legend:
(a) = wiper recess
(b) = wiper on request

Symbols, see **page 191**

Designations	Dimensions													Basic load ratings	
	Lead													dynamic	static
	d_0	P_h	l_{tp}	s_{ap}	d_1	d_2	D	A h12	D_1	J js12	G	Q	u	C_a	C_{oa}
	mm												[°]	kN	
SRF/BRF 48×5	48	5	3 300	0,02	48,4	47,3	105	127	150	127	6×M12	M8×1	30	198,08	481,53
SRF/BRF 48×8	48	8	3 300	0,04	48,6	47,1	105	127	150	127	6×M12	M8×1	30	218,43	470,61
SRF/BRF 48×10	48	10	3 300	0,04	48,8	46,7	105	127	150	127	6×M12	M8×1	30	231,54	475,11
SRF/BRF 48×15	48	15	3 300	0,07	49,2	46,1	105	127	150	127	6×M12	M8×1	30	257,75	486,36
SRF/BRF 48×20	48	20	3 300	0,07	49,5	45,5	105	127	150	127	6×M12	M8×1	30	265,69	462,27
SRF/BRF 48×25	48	25	3 300	0,07	49,9	44,9	105	127	150	127	6×M12	M8×1	30	285,86	491,04
SRF/BRF 56×12	56	12	4 000	0,04	56,8	54,7	105	112	150	127	6×M12	M8×1	30	212,17	433,12
SRF/BRF 56×24	56	24	4 000	0,07	57,5	53,5	105	112	150	127	6×M12	M8×1	30	242,22	419,15
SRF/BRF 56×36	56	36	4 000	0,07	58,3	52,3	105	112	150	127	6×M12	M8×1	30	258,33	424,24
SRF/BRF 60×10	60	10	4 250	0,04	60,8	58,7	122	152	180	150	6×M16	M8×1	30	338,57	779,69
SRF/BRF 60×15	60	15	4 250	0,07	61,2	58,1	122	152	180	150	6×M16	M8×1	30	373,06	782,69
SRF/BRF 60×20	60	20	4 250	0,07	61,5	57,5	122	152	180	150	6×M16	M8×1	30	394,97	785,66
SRF/BRF 64×12	64	12	4 600	0,04	64,8	62,7	120	129	180	150	6×M16	M8×1	30	296,38	763,3
SRF/BRF 64×18	64	18	4 600	0,07	65,2	62,1	120	129	180	150	6×M16	M8×1	30	316,72	725,56
SRF/BRF 64×24	64	24	4 600	0,07	65,5	61,5	120	129	180	150	6×M16	M8×1	30	328,93	689,62
SRF/BRF 64×30	64	30	4 600	0,07	65,9	60,9	120	129	180	150	6×M16	M8×1	30	318,15	619,84
SRF/BRF 64×36	64	36	4 600	0,07	66,3	60,3	120	129	180	150	6×M16	M8×1	30	309,12	589,38
SRF 75×10	75	10	5 500	0,04	75,8	73,7	150	191	210	180	8×M16	M8×1	22,5	504,86	1 486,68
SRF 75×15	75	15	5 500	0,07	76,2	73,1	150	191	210	180	8×M16	M8×1	22,5	561,29	1 491,3
SRF 75×20	75	20	5 500	0,07	76,5	72,5	150	191	210	180	8×M16	M8×1	22,5	572,26	1 495,87
SRF 80×12	80	12	6 000	0,04	80,8	78,7	150	156	210	180	8×M16	M8×1	22,5	410,27	1 163,16
SRF 80×18	80	18	6 000	0,07	81,2	78,1	150	156	210	180	8×M16	M8×1	22,5	455,94	1 167,63
SRF 80×24	80	24	6 000	0,07	81,5	77,5	150	156	210	180	8×M16	M8×1	22,5	485,8	1 172,06
SRF 80×36	80	36	6 000	0,07	82,3	76,3	150	156	210	180	8×M16	M8×1	22,5	442,89	999,09
SRF 80×42	80	42	6 000	0,07	82,7	75,7	150	156	210	180	8×M16	M8×1	22,5	425,64	932,95
SRF 99×20	99	20	7 500	0,07	100,5	96,5	200	260	275	245	12×M16	M8×1	15	924,86	3 090,44
SRF 100×24	100	24	8 000	0,07	101,5	97,5	180	195	255	220	12×M16	M8×1	15	655,81	1 825,82
SRF 120×24	120	24	8 000	0,07	121,5	117,5	220	240	295	260	12×M16	M8×1	15	915,02	3 027,05
SRF 120×25	120	25	8 000	0,07	121,9	116,9	260	280	340	305	12×M16	M12	15	1 127,43	4 037,97
SRF 150×25	150	25	8 000	0,07	151,9	146,9	320	400	385	355	12×M18	M12	15	1 596,53	6 816,05
SRF 150×36	150	36	8 000	0,07	152,3	146,3	280	305	370	330	12×M16	M12	15	1 156,92	4 108,09
SRC 180×30	180	30	5 000	0,07	182,3	176,3	420	515	470	433	12×M22	M12	15	1 962,34	9 069,02
SRC 210×30	210	30	3 700	0,07	212,3	206,3	480	550	530	490	12×M24	M12	15	2 295,6	11 375,26

3 Ball & roller screws

Roller screws

PRU - Range

Cylindrical nut preloaded for optimum rigidity

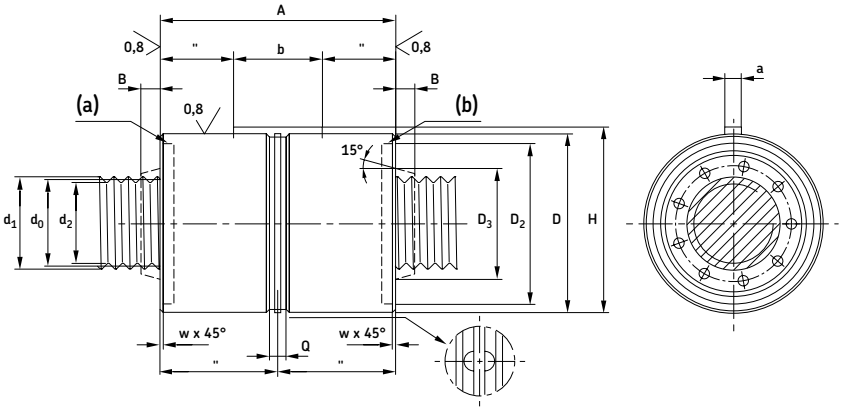

Legend:
(a) = wiper recess
(b) = wiper on request

Designations	Dimensions												Basic load ratings		Preload torque
	Lead												dynamic	static	
	d_0	P_h	l_{tp}	d_1	d_2	D g6/H7	A h12	a h9	b	B	H	Q	C_a	C_{oa}	T_{pr}
	mm												kN		Nm
PRU 8×4	8	4	400	8,4	7,3	25	44	4	12	3	26,5	5	6,19	9,79	0,06-0,13
PRU 12×5	12	5	600	12,4	11,3	30	44	4	12	3	31,5	5	9,77	13,36	0,12-0,25
PRU 15×5	15	5	750	15,4	14,3	35	50	4	16	3	36,5	5	14,3	21,8	0,18-0,36
PRU 15×8	15	8	750	15,5	14	35	50	4	16	3	36,5	5	15,11	20,39	0,18-0,36
PRU 20×6	20	6	1 050	20,4	19,3	40	50	4	16	4	41,5	5	14,78	22,43	0,26-0,58
PRU 21×5	21	5	1 100	21,4	20,3	45	64	5	20	4	47	5	27,85	40,98	0,31-0,63
PRU 21×6	21	6	1 100	21,4	20,3	45	64	5	20	4	47	5	29,08	41,09	0,31-0,63
PRU 21×8	21	8	1 100	21,5	20	45	64	5	20	4	47	5	30	39,03	0,31-0,63
PRU 21×10	21	10	1 100	21,8	19,7	45	64	5	20	4	47	5	32,64	41,51	0,31-0,63
PRU 24×6	24	6	1 250	24,4	23,3	48	58	5	20	6	50	5	23,31	32,59	0,39-0,78
PRU 24×12	24	12	1 250	24,8	22,7	48	58	5	20	6	50	5	26,25	31,17	0,39-0,78
PRU 25×5	25	5	1 300	25,4	24,3	53	78	6	25	6	55,5	5	34,85	54,12	0,42-0,84
PRU 25×10	25	10	1 300	25,8	23,7	53	78	6	25	6	55,5	5	40,02	52,65	0,42-0,84
PRU 25×15	25	15	1 300	26,2	23,1	53	78	6	25	6	55,5	5	43,62	53,2	0,42-0,84
PRU 30×5	30	5	1 600	30,4	29,3	64	85	6	32	7	66,5	5	50,68	89,16	0,57-1,13
PRU 30×6	30	6	1 600	30,4	29,3	64	85	6	32	7	66,5	5	52,34	87,67	0,57-1,13
PRU 30×10	30	10	1 600	30,8	28,7	64	85	6	32	7	66,5	5	58,58	87,18	0,57-1,13
PRU 30×20	30	20	1 600	31,5	27,5	64	85	6	32	7	66,5	5	67,92	88,64	0,85-1,41
PRU 36×6	36	6	1 900	36,4	35,3	68	80	5	25	8	70	5	49,83	89,69	0,77-1,53
PRU 36×9	36	9	1 900	36,5	35,1	68	80	5	25	8	70	5	53,73	87,03	0,77-1,53
PRU 36×12	36	12	1 900	36,8	34,7	68	80	5	25	8	70	5	58,73	90,55	0,77-1,53
PRU 36×18	36	18	1 900	37,2	34,1	68	80	5	25	8	70	5	62,89	88,29	0,77-1,53
PRU 36×24	36	24	1 900	37,5	33,5	68	80	5	25	8	70	5	68,1	92,19	1,15-1,91

Continued

Symbols, see **page 191**

PRU - Range
(*Continued*)

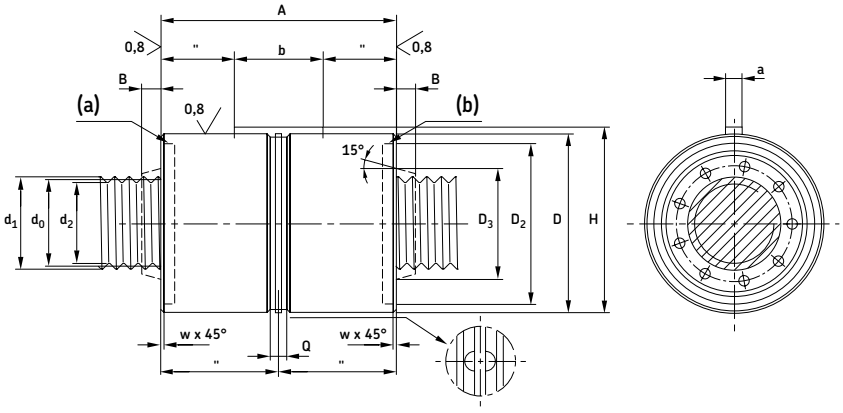

Legend:
(a) = wiper recess
(b) = wiper on request

Designations	Dimensions												Basic load ratings		Preload torque
	Lead												dynamic	static	
	d_0	P_h	l_{tp}	d_1	d_2	D g6/H7	A h12	a h9	b	H	B	Q	C_a	C_{oa}	T_{pr}
	mm												kN		Nm
PRU 39×5	39	5	2 100	39,4	38,3	80	100	8	40	83	8	7	71,19	134,46	0,88-1,75
PRU 39×10	39	10	2 100	39,8	37,7	80	10	8	40	83	8	7	84,09	135,46	0,88-1,75
PRU 39×15	39	15	2 100	40,2	37,1	80	100	8	40	83	8	7	92,36	136,45	0,88-1,75
PRU 39×20	39	20	2 100	40,5	36,5	80	100	8	40	83	8	7	95,22	130,45	0,88-1,75
PRU 39×25	39	25	2 100	40,9	35,9	80	100	8	40	83	8	7	96,3	124,5	1,31-2,19
PRU 44×8	44	8	2 400	44,4	43,2	80	90	6	32	82,5	8	7	71,89	130,73	1,07-2,14
PRU 44×12	44	12	2 400	44,8	42,7	80	90	6	32	82,5	8	7	79,18	131,44	1,07-2,14
PRU 44×18	44	18	2 400	45,2	42,1	80	90	6	32	82,5	8	7	86,91	132,47	1,07-2,14
PRU 44×24	44	24	2 400	45,5	41,5	80	90	6	32	82,5	8	7	92,46	133,48	1,07-21,4
PRU 44×30	44	30	2 400	45,9	40,9	80	90	6	32	82,5	8	7	91,38	123,22	1,60-2,68
PRU 48×5	48	5	2 600	48,4	47,3	100	127	8	45	103	9	7	109,13	240,77	1,24-2,47
PRU 48×8	48	8	2 600	48,6	47,1	100	127	8	45	103	9	7	120,34	235,3	1,24-2,47
PRU 48×10	48	10	2 600	48,8	46,7	100	127	8	45	103	9	7	127,57	237,56	1,24-2,47
PRU 48×15	48	15	2 600	49,2	46,1	100	127	8	45	103	9	7	142,01	243,18	1,24-2,47
PRU 48×20	48	20	2 600	49,5	45,5	100	127	8	45	103	9	7	146,38	231,14	1,24-2,47
PRU 48×25	48	25	2 600	49,9	44,9	100	127	8	45	103	9	7	157,5	245,52	1,24-2,47
PRU 56×12	56	12	3 100	56,8	54,7	100	112	8	40	103	9	7	116,9	216,56	1,60-3,19
PRU 56×24	56	24	3 100	57,3	53,5	100	112	8	40	103	9	7	133,45	209,58	1,60-3,19
PRU 56×36	56	36	3 100	58,3	52,3	100	112	8	40	103	9	7	142,33	212,12	2,39-3,99
PRU 60×10	60	10	3 400	60,8	58,7	122	152	10	45	125	9	10,5	186,53	389,85	1,79-3,58
PRU 60×15	60	15	3 400	61,2	58,1	122	152	10	45	125	9	10,5	205,54	391,35	1,79-3,58
PRU 60×20	60	20	3 400	61,5	57,5	122	152	10	45	125	9	10,5	217,61	392,83	1,79-3,58
PRU 64×12	64	12	3 650	64,8	62,7	115	129	8	45	118	11	7	165,57	381,65	1,99-3,98
PRU 64×18	64	18	3 650	65,2	62,1	115	129	8	45	118	11	7	176,93	362,78	1,99-3,98
PRU 64×24	64	24	3 650	65,5	61,5	115	129	8	45	118	11	7	183,76	344,81	1,99-3,98
PRU 64×30	64	30	3 650	65,9	60,9	115	129	8	45	118	11	7	177,73	309,92	1,99-3,98
PRU 64×36	64	36	3 650	66,3	60,3	115	129	8	45	118	11	7	172,69	294,69	1,99-3,98

Symbols, see **page 191**

3 Ball & roller screws
Roller screws

PRK - Range

Flanged nut preloaded for optimum rigidity

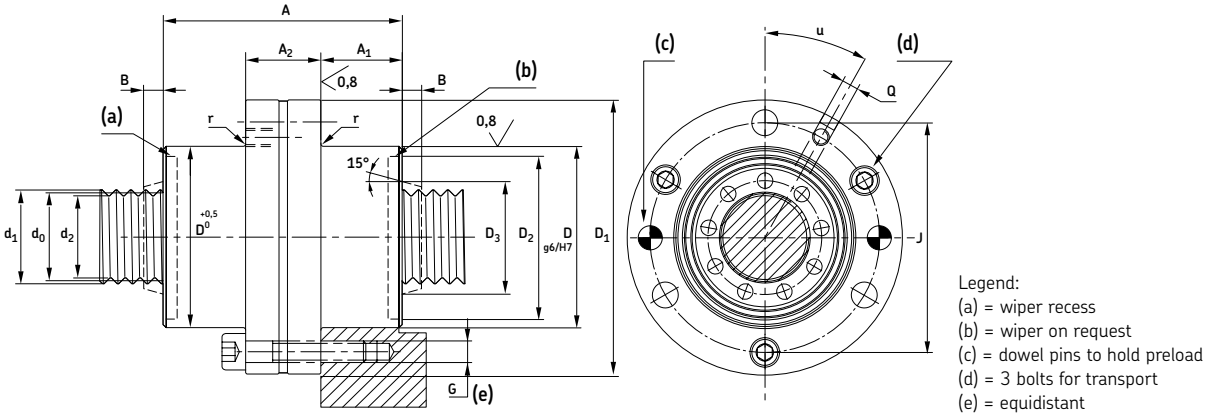

Legend:
(a) = wiper recess
(b) = wiper on request
(c) = dowel pins to hold preload
(d) = 3 bolts for transport
(e) = equidistant

Designations	Dimensions													Basic load ratings		Preload torque
	Lead													dynamic	static	
	d_0	P_h	l_{tp}	d_1	d_2	D	A h12	D_1	B	J js12	G	Q	u	C_a	C_{oa}	T_{pr}
	mm												[°]	kN		Nm
PRK 8×4	8	4	400	8,4	7,3	25	44	46	3	36	6×M4	M6	30	6,19	9,79	0,06-0,13
PRK 12×5	12	5	600	12,4	11,3	30	44	51	3	41	6×M4	M6	30	9,77	13,36	0,12-0,25
PRK 15×5	15	5	750	15,4	14,3	35	50	58	3	46	6×M5	M6	30	14,3	21,8	0,18-0,36
PRK 15×8	15	8	750	15,5	14	35	50	58	3	46	6×M5	M6	30	15,11	20,39	0,18-0,36
PRK 20×6	20	6	1 050	20,4	19,3	40	50	63	4	51	6×M5	M6	30	14,78	22,43	0,26-0,58
PRK 21×5	21	5	1 100	21,4	20,3	45	64	68	4	56	6×M5	M6	30	27,85	40,98	0,31-0,63
PRK 21×6	21	6	1 100	21	20,3	45	64	68	4	56	6×M5	M6	30	29,08	41,09	0,31-0,63
PRK 21×8	21	8	1 100	21	20	45	64	68	4	56	6×M5	M6	30	30	39,03	0,31-0,63
PRK 21×10	21	10	1 100	21,8	19,7	45	64	68	4	56	6×M5	M6	30	32,64	41,51	0,31-0,63
PRK 24×6	24	6	1 250	24,4	23,3	48	58	71	6	59	6×M5	M6	30	23,31	32,59	0,39-0,78
PRK 24×12	24	12	1 250	24,8	22,7	48	58	71	6	59	6×M5	M6	30	26,25	31,17	0,39-0,78
PRK 25×5	25	5	1 300	25,4	24,3	56	78	84	6	70	6×M6	M6	30	34,85	54,12	0,42-0,84
PRK 25×10	25	10	1 300	25,8	23,7	56	78	84	6	70	6×M6	M6	30	40,02	52,65	0,42-0,84
PRK 25×15	25	15	1 300	26,2	23,1	56	78	84	6	70	6×M6	M6	30	43,62	53,2	0,42-0,84
PRK 30×5	30	5	1 600	30,4	29,3	64	85	98	7	81	6×M8	M6	30	50,68	89,16	0,57-1,13
PRK 30×6	30	6	1 600	30,8	29,3	64	85	98	7	81	6×M8	M6	30	52,34	87,67	0,57-1,13
PRK 30×10	30	10	1 600	31,8	28,7	64	85	98	7	81	6×M8	M6	30	58,58	87,18	0,57-1,13
PRK 30×20	30	20	1 600	31,5	27,5	64	85	98	7	81	6×M8	M6	30	67,92	88,64	0,85-1,41
PRK 36×6	36	6	1 900	36,4	35,3	68	80	102	8	85	6×M8	M6	30	49,83	89,69	0,77-1,53
PRK 36×9	36	9	1 900	36,5	35,1	68	80	102	8	85	6×M8	M6	30	53,73	87,03	0,77-1,53
PRK 36×12	36	12	1 900	36,8	34,7	68	80	102	8	85	6×M8	M6	30	58,73	90,55	0,77-1,53
PRK 36×18	36	18	1 900	37,2	34,1	68	80	102	8	85	6×M8	M6	30	62,89	88,29	0,77-1,53
PRK 36×24	36	24	1 900	37,5	33,5	68	80	102	8	85	6×M8	M6	30	68,1	92,19	1,15-1,91

Continued

Symbols, see **page 191**

PRK - Range
(*Continued*)

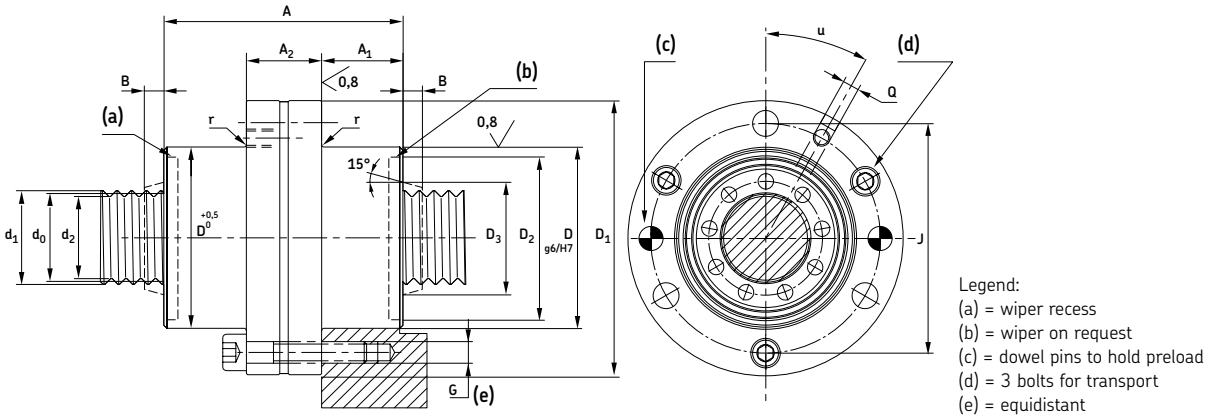

Legend:
(a) = wiper recess
(b) = wiper on request
(c) = dowel pins to hold preload
(d) = 3 bolts for transport
(e) = equidistant

Designations	Dimensions													Basic load ratings		Preload torque
	Lead													dynamic	static	
	d_0	P_h	l_{tp}	d_1	d_2	D	A h12	D_1	B	J js12	G	Q	u	C_a	C_{oa}	T_{pr}
	mm												[°]	kN		Nm
PRK 39×5	39	5	2 100	39,4	38,3	82	100	124	8	102	6×M10	M6	30	71,19	134,46	0,88-1,75
PRK 39×10	39	10	2 100	39,8	37,7	82	100	124	8	102	6×M10	M6	30	84,09	135,46	0,88-1,75
PRK 39×15	39	15	2 100	40,2	37,1	82	100	124	8	102	6×M10	M6	30	92,36	136,45	0,88-1,75
PRK 39×20	39	20	2 100	40,5	36,5	82	100	124	8	102	6×M10	M6	30	95,22	130,45	0,88-1,75
PRK 39×25	39	25	2 100	40,9	35,9	82	100	124	8	102	6×M10	M6	30	96,3	124,5	1,31-2,19
PRK 44×8	44	8	2 400	44,4	43,2	82	90	124	8	102	6×M10	M6	30	71,89	130,73	1,07-2,14
PRK 44×12	44	12	2 400	44,8	42,7	82	90	124	8	102	6×M10	M6	30	79,18	131,44	1,07-2,14
PRK 44×18	44	18	2 400	45,2	42,1	82	90	124	8	102	6×M10	M6	30	86,91	132,47	1,07-2,14
PRK 44×24	44	24	2 400	45,5	41,5	82	90	124	8	102	6×M10	M6	30	92,46	133,48	1,07-2,14
PRK 44×30	44	30	2 400	45,9	40,9	82	90	124	8	102	6×M10	M6	30	91,38	123,22	1,60-2,68
PRK 48×5	48	5	2 600	48,4	47,3	105	127	150	9	127	6×M12	M8×1	30	109,13	240,77	1,24-2,47
PRK 48×8	48	8	2 600	48,6	47,1	105	127	150	9	127	6×M12	M8×1	30	120,34	235,3	1,24-2,47
PRK 48×10	48	10	2 600	48,8	46,7	105	127	150	9	127	6×M12	M8×1	30	127,57	237,56	1,24-2,47
PRK 48×15	48	15	2 600	49,2	46,1	105	127	150	9	127	6×M12	M8×1	30	142,01	243,18	1,24-2,47
PRK 48×20	48	20	2 600	49,5	45,5	105	127	150	9	127	6×M12	M8×1	30	146,38	231,14	1,24-2,47
PRK 48×25	48	25	2 600	49,9	44,9	105	127	150	9	127	6×M12	M8×1	30	157,5	245,52	1,24-2,47
PRK 56×12	56	12	3 100	56,8	54,7	105	112	150	9	127	6×M12	M8×1	30	116,9	216,56	1,60-3,19
PRK 56×24	56	24	3 100	57,5	53,5	105	112	150	9	127	6×M12	M8×1	30	133,45	209,58	1,60-3,19
PRK 56×36	56	36	3 100	58,3	52,3	105	112	150	9	127	6×M12	M8×1	30	142,33	212,12	2,39-3,99
PRK 60×10	60	10	3 400	60,8	58,7	122	152	180	9	150	6×M16	M8×1	30	186,53	389,85	1,79-3,58
PRK 60×15	60	15	3 400	61,2	58,1	122	152	180	9	150	6×M16	M8×1	30	205,54	391,35	1,79-3,58
PRK 60×20	60	20	3 400	61,5	57,5	122	152	180	9	150	6×M16	M8×1	30	217,61	392,83	1,79-3,58
PRK 64×12	64	12	3 650	64,8	62,7	120	129	180	11	150	6×M16	M8×1	30	165,57	381,65	1,99-3,98
PRK 64×18	64	18	3 650	65,2	62,1	120	129	180	11	150	6×M16	M8×1	30	176,93	362,78	1,99-3,98
PRK 64×24	64	24	3 650	65,5	61,5	120	129	180	11	150	6×M16	M8×1	30	183,76	344,81	1,99-3,98
PRK 64×30	64	30	3 650	65,9	60,9	120	129	180	11	150	6×M16	M8×1	30	177,73	309,92	1,99-3,98
PRK 64×36	64	36	3 650	66,3	60,3	120	129	180	11	150	6×M16	M8×1	30	172,69	294,69	1,99-3,98

Symbols, see **page 191**

3 Ball & roller screws
Roller screws

SVC/BVC - Range

Cylindrical nut with axial play/with backlash elimination

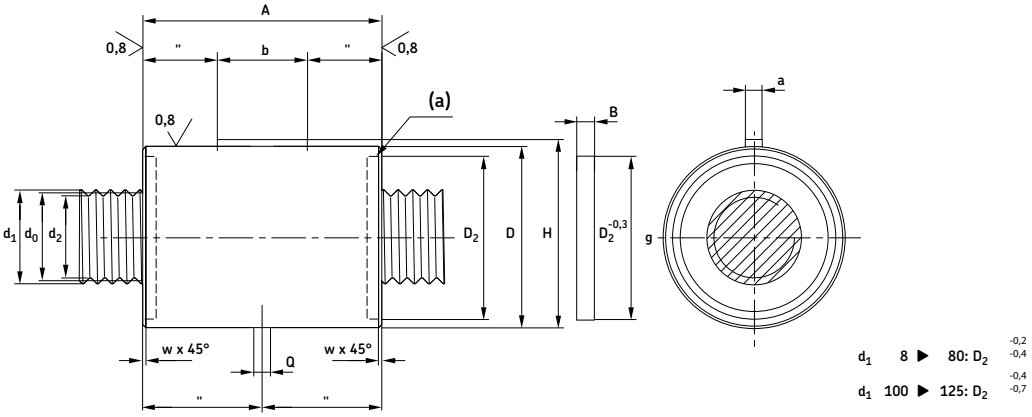

d_1 8 ▶ 80: D_2 $^{-0,2}_{-0,4}$

d_1 100 ▶ 125: D_2 $^{-0,4}_{-0,7}$

Legend:
(a) = wiper on request

Designations	Dimensions														Basic load ratings	
	Lead														dynamic	static
	d_1	P_h	l_{tp}	s_{ap}	d_0	d_2	D g6/H7	A* h12	A** h12	a h9	b	B	H	Q	C_a	C_{oa}
	mm														kN	
SVC/BVC 8×1	8	1	500	0,02	7,7	7,1	20	40	31	2	12	4	20,8	5	8,4	11
SVC/BVC 10×1	10	1	650	0,02	9,7	9,1	22	40	31	2	12	4	22,8	5	8,9	11,4
SVC/BVC 10×2	10	2	650	0,02	9,7	9,1	22	40	31	2	12	4	22,8	5	8,9	11,4
SVC/BVC 12×1	12	1	750	0,02	11,7	11,1	24	40	31	2	12	4	24,8	5	10,3	14
SVC/BVC 12×2	12	2	750	0,02	11,7	11,1	24	40	31	2	12	4	24,8	5	10,3	14
SVC/BVC 16×1	16	1	1 050	0,02	15,7	15,1	29	40	31	3	12	4	30,2	5	11,5	16,8
SVC/BVC 16×2	16	2	1 050	0,02	15,7	15,1	29	40	31	3	12	4	30,2	5	11,5	16,8
SVC/BVC 20×1	20	1	1 300	0,02	19,7	19,1	34	45	37	3	16	4	35,2	5	18,5	36,6
SVC/BVC 20×2	20	2	1 300	0,02	19,7	19,1	34	45	37	3	16	4	35,2	5	18,5	36,6
SVC/BVC 25×1	25	1	1 650	0,02	24,7	24,1	42	54	44	4	20	5	43,5	5	32,9	68,4
SVC/BVC 25×2	25	2	1 650	0,02	24,7	24,1	42	54	44	4	20	5	43,5	5	32,9	68,4
SVC/BVC 32×1	32	1	2 150	0,02	31,7	31,1	54	67	57	4	25	5	55,5	5	64,3	159,2
SVC/BVC 32×2	32	2	2 150	0,02	31,7	31,1	54	67	57	4	25	5	55,5	5	64,3	159,2
SVC/BVC 40×1	40	1	2 700	0,02	39,7	39,1	68	75	63	5	32	5	70	5	79,1	231,6
SVC/BVC 40×2	40	2	2 700	0,04	39,3	38,2	68	84	72	5	32	5	70	5	49,9	117,2
SVC/BVC 50×1	50	1	3 500	0,02	49,7	49,1	82	101	85	6	32	7	84,5	8	189,8	544,3
SVC/BVC 50×2	50	2	3 500	0,04	49,3	48,7	82	101	85	6	32	7	84,5	8	98,1	249,4
SVC 50×3	50	3	3 500	0,04	49,5	48,6	82	108	92	6	35	7	84,5	8	153	443,3
SVC 50×4	50	4	3 500	0,04	49,3	48,2	82	101	85	6	32	7	84,5	8	98,1	249,4
SVC 63×2	63	2	4 500	0,04	62,3	61,2	103	120	104	6	40	7	105,5	8	185,8	533,5
SVC 63×4	63	4	4 500	0,04	62,3	61,2	103	120	104	6	40	7	105,5	8	185,8	533,5
SVC 80×4	80	4	6 000	0,07	78,6	76,4	141	197	175	8	63	10	144	10	324,9	887,7
SVC 100×5	100	5	8 000	0,07	98,3	95,5	175	237	205	10	80	15	178	10	468,5	1 376,3
SVC 125×5	125	5	8 000	0,07	123,3	120,5	220	282	250	12	100	15	223	12	756	2 270

* With wiper recess
** Without wiper recess

Symbols, see **page 191**

SVF/BVF - Range

Flanged nuts with axial play/with backlash elimination

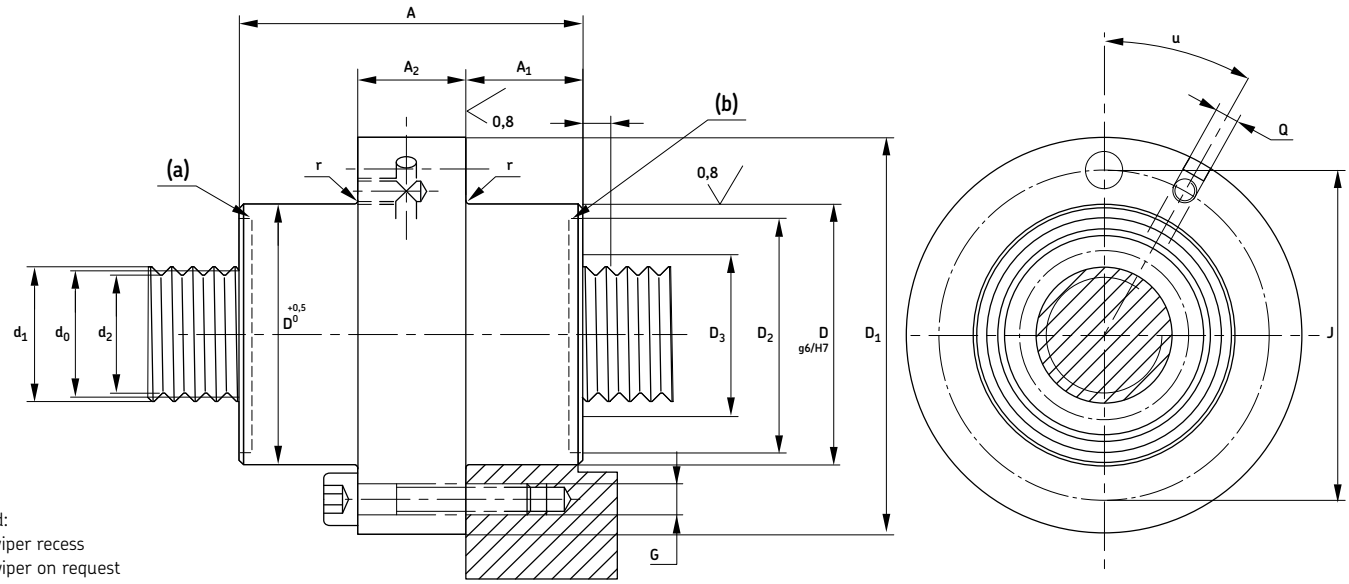

Legend:
(a) = wiper recess
(b) = wiper on request

Designations	Dimensions													
	Lead													
	d_1	P_h	l_{tp}	d_0	d_2	D g6/H7	A h12	D_1	J js12	G	Q	u	C_a	C_{0a}
				mm								[°]		
SVF/BVF 8×1	8	1	500	7,7	7,1	22	40	43	33	6×M4	M6	30	8,4	11
SVF/BVF 10×1	10	1	650	9,7	9,1	22	40	43	33	6×M4	M6	30	8,9	11,4
SVF/BVF 10×2	10	2	650	9,7	9,1	22	40	43	33	6×M4	M6	30	8,9	11,4
SVF/BVF 12×1	12	1	750	11,7	11,1	25	40	46	36	6×M4	M6	30	10,3	14
SVF/BVF 12×2	12	2	750	11,7	11,1	25	40	46	36	6×M4	M6	30	10,3	14
SVF/BVF 16×1	16	1	1 050	15,7	15,1	30	40	51	41	6×M4	M6	30	11,5	16,8
SVF/BVF 16×2	16	2	1 050	15,7	15,1	30	40	51	41	6×M4	M6	30	11,5	16,8
SVF/BVF 20×1	20	1	1 300	19,7	19,1	35	45	58	46	6×M5	M6	30	18,5	36,6
SVF/BVF 20×2	20	2	1 300	19,7	19,1	35	45	58	46	6×M5	M6	30	18,5	36,6
SVF/BVF 25×1	25	1	1 650	24,7	24,1	45	54	68	56	6×M5	M6	30	32,9	68,4
SVF/BVF 25×2	25	2	1 650	24,7	24,1	45	54	68	56	6×M5	M6	30	32,9	68,4
SVF/BVF 32×1	32	1	2 150	31,7	31,1	56	67	84	70	6×M6	M6	30	64,3	159,2
SVF/BVF 32×2	32	2	2 150	31,7	31,1	56	67	84	70	6×M6	M6	30	64,3	159,2
SVF/BVF 40×1	40	1	2 700	39,7	39,1	68	75	102	85	6×M8	M6	30	79,1	231,6
SVF/BVF 40×2	40	2	2 700	39,3	38,2	68	84	102	85	6×M8	M6	30	49,9	117,2
SVF/BVF 50×1	50	1	3 500	49,7	49,1	82	101	124	102	6×M10	M6	30	189,8	544,3
SVF/BVF 50×2	50	2	3 500	49,3	48,7	82	101	124	102	6×M10	M6	30	98,1	249,4
SVF 50×3	50	3	3 500	49,5	48,6	82	108	124	102	6×M10	M6	30	153	443,3
SVF 50×4	50	4	3 500	49,3	48,2	82	101	124	102	6×M10	M6	30	98,1	249,4
SVF 63×2	63	2	4 500	62,3	61,2	105	120	150	127	6×M12	M8×1	30	185,8	533,5
SVF 63×4	63	4	4 500	62,3	61,2	105	120	150	127	6×M12	M8×1	30	185,8	533,5
SVF 80×4	80	4	6 000	78,6	76,4	140	197	200	170	8×M16	M8×1	22,5	324,9	887,7
SVF 100×5	100	5	8 000	98,4	95,5	180	237	240	210	10×M16	M8×1	15	468,5	1 376,3
SVF 125×5	125	5	8 000	123,3	120,5	220	282	310	270	12×M18	M8×1	15	756	2 770

Symbols, see **page 191**

3 Ball & roller screws

Roller screws

PVU - Range

Cylindrical nut preloaded for optimum rigidity

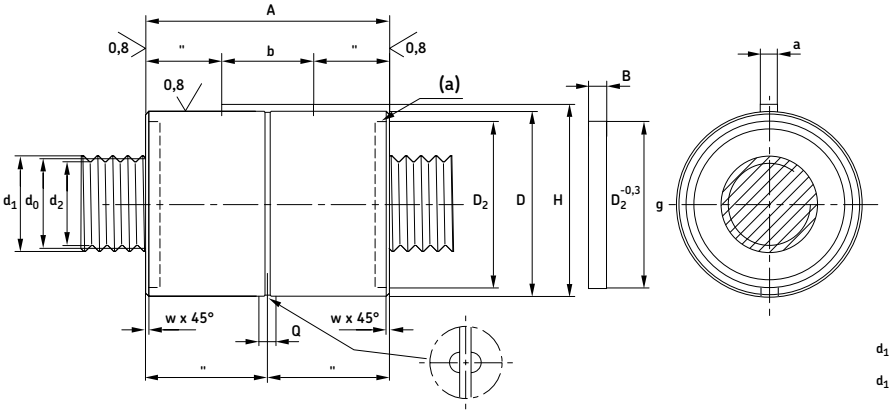

d_1 8 ▶ 80: D_2 $^{-0,2}_{-0,4}$

d_1 100 ▶ 125: D_2 $^{-0,4}_{-0,7}$

Legend:
(a) = wiper on request

Designations	Dimensions														
	d_0	d_1	d_2	D g6/H7	A* h12	A** h12	C_a	C_{0a}	B	w	a h9	b	H	Q	D_2
	mm						kN		mm						
PVU 8×1	7,7	8	7,1	20	40	31	4,8	5,5	4	0,2	2	12	20,8	5	16,5
PVU 10×1	9,7	10	9,1	22	40	31	5,1	5,7	4	0,2	2	12	22,8	5	18,5
PVU 10×2	9,7	10	9,1	22	40	31	5,1	5,7	4	0,2	2	12	22,8	5	18,5
PVU 12×1	11,7	12	11,1	24	40	31	5,9	7	4	0,2	2	12	24,8	5	20,5
PVU 12×2	11,7	12	11,1	24	40	31	5,9	7	4	0,2	2	12	24,8	5	20,5
PVU 16×1	15,7	16	15,71	29	40	31	6,6	8,4	4	0,5	3	12	30,2	5	25
PVU 16×2	15,7	16	15,71	29	40	31	6,6	8,4	4	0,5	3	12	30,2	5	25
PVU 20×1	19,7	20	19,71	34	45	37	10,6	18,3	4	0,5	3	16	35,2	5	28,5
PVU 20×2	19,7	20	19,71	34	45	37	10,6	18,3	4	0,5	3	16	35,2	5	28,5
PVU 25×1	24,7	25	24,1	42	54	44	18,9	34,2	5	0,5	4	20	43,5	5	36
PVU 25×2	24,7	25	24,1	42	54	44	18,9	34,2	5	0,5	4	20	43,5	5	36
PVU 32×1	31,7	32	31,1	54	67	57	36,9	79,6	5	1	4	25	55,5	5	45
PVU 32×2	31,7	32	31,1	54	67	57	36,9	79,6	5	1	4	25	55,5	5	45
PVU 40×1	39,7	40	39,1	68	75	63	45,4	115,8	5	1	5	32	70	5	55
PVU 40×2	39,3	40	38,2	68	84	72	28,7	58,6	5	1	5	32	70	5	57
PVU 50×1	49,7	50	49,1	82	101	85	109	272,2	7	1	6	32	84,5	8	70
PVU 50×2	49,3	50	48,7	82	101	85	56,3	124,7	7	1	6	32	84,5	8	70
PVU 50×3	49,5	50	48,6	82	108	92	88	221,7	7	1,5	6	35	84,5	8	70
PVU 50×4	49,3	50	48,2	82	101	85	56,3	124,7	7	1	6	32	84,5	8	70
PVU 63×2	62,3	63	61,2	103	120	104	106,7	266,8	7	1	6	40	105,5	8	94
PVU 63×4	62,3	63	61,2	103	120	104	106,7	266,8	7	1	6	40	105,5	8	94
PVU 80×4	78,6	80	76,4	141	197	175	186,6	443,9	10	1,5	8	63	144	10	120
PVU 100×5	98,4	100	95,5	175	237	205	269,1	688,2	15	2	10	80	178	10	150
PVU 125×5	123,3	125	120,5	120	282	250	434	1 385	15	3	12	100	223	12	185

* With wiper recess
** Without wiper recess

Symbols, see **page 191**

PVK - Range

Flanged nut preloaded for optimum rigidity

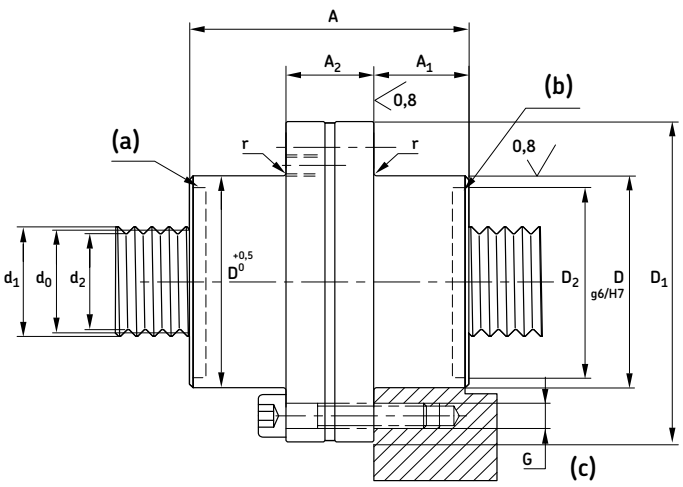

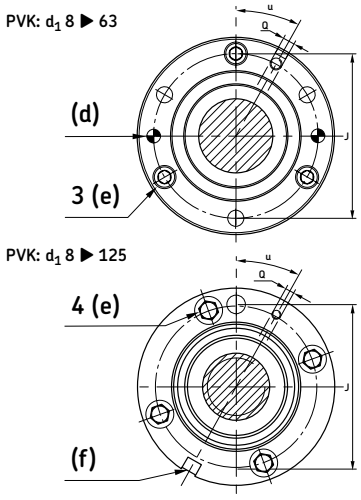

Legend:
(a) = wiper recess
(b) = wiper on request
(c) = equidistant
(d) = dowel pins to hold preload
(e) = bolts for transport
(f) = key to hold preload

Designations	Dimensions												Basic load ratings		Preload torque
	Lead												dynamic	static	
	d_1	P_h	l_{tp}	d_0	d_2	D	A h12	D_1	J js12	G	Q	u	C_a	C_{oa}	T_{pr}
	mm											[°]	kN		Nm
PVK 8×1	8	1	400	7,7	7,1	22	40	43	33	6×M4	M6	30	4,8	5,5	0,02 - 0,08
PVK 10×1	10	1	500	9,7	9,1	22	40	43	33	6×M4	M6	30	5,1	5,7	0,03 - 0,10
PVK 10×2	10	2	500	9,7	9,1	22	40	43	33	6×M4	M6	30	5,1	5,7	0,03 - 0,10
PVK 12×1	12	1	600	11,7	11,1	25	40	46	36	6×M4	M6	30	5,9	7	0,05 - 0,15
PVK 12×2	12	2	600	11,7	11,1	25	40	46	36	6×M4	M6	30	5,9	7	0,05 - 0,15
PVK 16×1	16	1	825	15,7	15,1	30	40	51	41	6×M4	M6	30	6,6	8,4	0,10 - 0,20
PVK 16×2	16	2	825	15,7	15,1	30	40	51	41	6×M4	M6	30	6,6	8,4	0,10 - 0,20
PVK 20×1	20	1	1 050	19,7	19,1	35	45	58	46	6×M5	M6	30	10,6	18,3	0,18 - 0,32
PVK 20×2	20	2	1 050	19,7	19,1	35	45	58	46	6×M5	M6	30	10,6	18,3	0,20 - 0,35
PVK 25×1	25	1	1 300	24,7	24,1	45	54	68	56	6×M5	M6	30	18,9	34,2	0,35 - 0,65
PVK 25×2	25	2	1 300	24,7	24,1	45	54	68	56	6×M5	M6	30	18,9	34,2	0,40 - 0,70
PVK 32×1	32	1	1 700	31,7	31,1	56	67	84	70	6×M6	M6	30	36,9	79,6	0,50 - 0,95
PVK 32×2	32	2	1 700	31,7	31,1	56	67	84	70	6×M6	M6	30	36,9	79,6	0,50 - 0,95
PVK 40×1	40	1	2 150	39,7	39,1	68	75	102	85	6×M8	M6	30	45,4	115,8	0,70 - 1,40
PVK 40×2	40	2	2 150	39,3	38,2	68	84	102	85	6×M8	M6	30	28,7	58,6	0,70 - 1,40
PVK 50×1	50	1	2 800	49,7	49,1	82	101	124	102	6×M10	M6	30	109	272,2	1,20 - 2,50
PVK 50×2	50	2	2 800	49,3	48,7	82	101	124	102	6×M10	M6	30	56,3	124,7	1,20 - 2,50
PVK 50×3	50	3	2 800	49,5	48,6	82	108	124	102	6×M10	M6	30	88	221,7	1,20 - 2,50
PVK 50×4	50	4	2 800	49,3	48,2	82	101	124	102	6×M10	M6	30	56,3	124,7	1,20 - 2,50
PVK 63×2	63	2	3 600	62,3	61,2	105	120	150	127	6×M12	M8×1	30	106,7	266,8	1,80 - 3,20
PVK 63×4	63	4	3 600	62,3	61,2	105	120	150	127	6×M12	M8×1	30	106,7	266,8	2,00 - 3,50
PVK 80×4	80	4	4 000	78,6	76,4	140	197	200	170	8×M16	M8×1	22,5	186,6	443,9	3,00 - 5,50
PVK 100×5	100	5	4 000	98,4	95,5	180	237	240	210	10×M16	M8×1	15	269,1	688,2	4,50 - 7,50
PVK 125×5	125	5	4 000	123,3	120,5	220	282	310	270	12×M18	M8×1	15	434	1 385	7,00 - 10,0

Symbols, see **page 191**

3 Ball & roller screws
Roller screws

Ultra Power range

The SKF Ultra Power range (**figs. 26** and **27**) is designed for heavy loads and long service life.

High load capacity

A SKF Ultra Power range of planetary roller screws has been optimized to provide a capacity increase up to 60% over the standard roller screw with the same combination of diameter and lead, and, in addition, to reach the maximum possible service life within a compact space.

The maximum load should not be applied on the mounting bolts but on the flange.

For each screw size, the roller screw catalogue will display two different values for the dynamic load carrying capacity (Ca) according to the maximum load being applied. The catalogue also specifies a reference load F_a:

- The higher C_a value is valid for maximum application load ≤ F_a
- The lower C_a value is valid for maximum application loads > F_a and up to 80% of the lower C_a value (except for diameter 60, where maximum application loads should not exceed 50% of the lower C_a value)

Example

HRP 120 x 20

- Plastic injection application ($F \leq F_a$)
  - F_{max} = 320 kN
  - C_a = 1 550 kN
- Heavy press application ($F > F_a$)
  - F_{max} = 954 kN
  - C_a = 1 192 kN

Short strokes/oscillation performance

The kinematics of all SKF planetary roller screws provides continuous rolling of the working elements without recirculation.

They are highly reliable in high load applications with short strokes and rapid changes of direction.

Fig. 26

Designation
HRC: cylindrical nut
HRP: nut with off-centered flange
HRF: nut with centered flange

Fig. 27

Axial play
The Ultra Power range is available with axial end play lower than 0,07 mm (0,1 mm for screws with lead ≥ 40 mm).

Preload is not available.

Lead precision
Standard lead precision is G5.

Speed - Environment
All SKF planetary roller screws are rated to a maximum $n \times d_0$ value of 160 000. Their rollers are further controlled by planetary gears which help maintain rolling under extreme conditions of speed and/or contamination.

The rolling performance provides low noise operation. For maximum speed under heavy load, please contact SKF for advice.

Wipers
Standard version includes wipers (WPR in the designation). Screws can be delivered without wipers on request (NOWPR).

Lubrication
Because of the heavy loads and high duty cycles, special care must be given to the choice of lubricant. Please contact SKF for advice.

Applications
The Ultra Power range offers the power of hydraulic actuators combined with the precision and flexibility of electric control. Application examples include:

- Injection molding machines for plastic and rubber
- Presses
- Broaching machines
- Steel industry including casting & rolling
- Friction welding
- Hydro-electric plants
- Actuators.

3 Ball & roller screws
Roller screws

HRC - Range

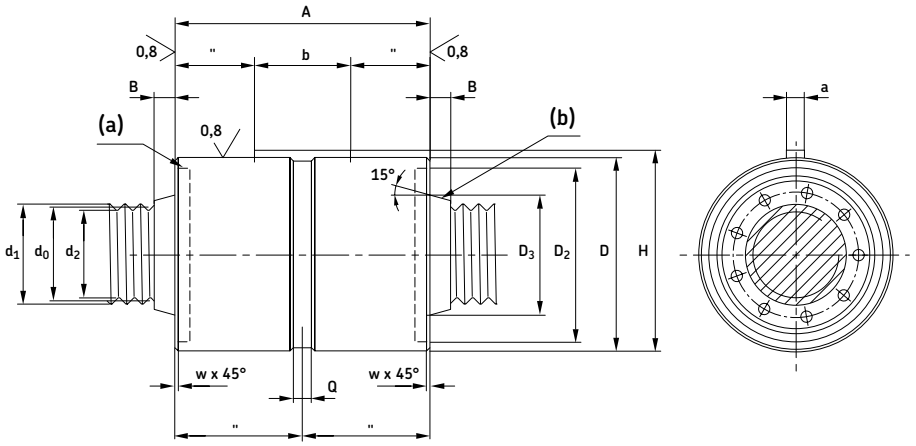

Legend:
(a) = wiper recess
(b) = wiper

Designations	Dimensions													Basic load ratings		
	Lead													dynamic		static
	d_0	P_h	l_{tp}	d_1	d_2	D g6/H7	A h12	a h9	b	B	H	Q	Fa	C_a mol* ≤ Fa	C_a mol* > Fa	C_{oa}
	mm												kN			
HRC 60×15	60	15	4 250	61,1	58,5	122	171	10	56	9	125	11	90	545	495	1 206
HRC 60×20	60	20	4 250	61,3	56	122	171	10	56	9	125	11	90	568	516	1 181
HRC 60×25	60	25	4 250	61,6	54,9	122	171	10	56	9	125	11	90	548	498	1 115
HRC 60×30	60	30	4 250	61,8	53,8	122	171	10	56	9	125	11	90	547	497	1 105
HRC 75×15	75	15	5 500	76,1	73,5	150	213	10	63	10	153	11	130	772	643	1 855
HRC 75×20	75	20	5 500	76,4	71	150	213	10	63	10	153	11	130	781	651	1 842
HRC 75×25	75	25	5 500	76,7	70	150	213	10	63	10	153	11	130	791	659	1 846
HRC 75×30	75	30	5 500	76,9	68,9	150	213	10	63	10	153	11	130	788	657	1 815
HRC 87×15	87	15	6 000	88,1	85,5	175	245	12	100	12	178	12	180	979	816	2 645
HRC 87×20	87	20	6 000	88,4	83	175	245	12	100	12	178	12	180	982	818	2 589
HRC 87×25	87	25	6 000	88,7	82	175	245	12	100	12	178	12	180	1 004	837	2 635
HRC 87×30	87	30	6 000	89	81	175	245	12	100	12	178	12	180	1 003	836	2 599
HRC 99×15	99	15	7 500	100,1	97,5	200	280	16	100	12	204	15	240	1 231	985	3 503
HRC 99×20	99	20	7 500	100,4	95	200	280	16	100	12	204	15	240	1 263	1 010	3 556
HRC 99×25	99	25	7 500	100,7	94	200	280	16	100	12	204	15	240	1 280	1 024	3 561
HRC 99×30	99	30	7 500	101	93	200	280	16	100	12	204	15	240	1 281	1 025	3 520
HRC 99×35	99	35	7 500	101,3	91,9	200	280	16	100	12	204	15	240	1 281	1 025	3 479
HRC 112,5×15	112,5	15	7 500	113,6	111,1	230	300	16	100	12	234	15	290	1 425	1 140	4 327
HRC 112,5×20	112,5	20	7 500	113,9	108,6	230	300	16	100	12	234	15	290	1 451	1 161	4 334
HRC 112,5×25	112,5	25	7 500	114,2	107,5	230	300	16	100	12	234	15	290	1 393	1 114	4 006
HRC 112,5×30	112,5	30	7 500	114,5	106,5	230	300	16	100	12	234	15	290	1 401	1 121	3 986
HRC 112,5×35	112,5	35	7 500	114,8	105,5	230	300	16	100	12	234	15	290	1 408	1 126	3 967
HRC 120×15	120	15	8 000	121,1	118,6	240	330	16	100	12	244	15	320	1 550	1 192	4 635
HRC 120×20	120	20	8 000	121,4	116,1	240	330	16	100	12	244	15	320	1 590	1 223	4 697
HRC 120×25	120	25	8 000	121,8	115,1	240	330	16	100	12	244	15	320	1 587	1 221	4 592
HRC 120×30	120	30	8 000	122,1	114	240	330	16	100	12	244	15	320	1 616	1 243	4 656
HRC 120×35	120	35	8 000	122,3	113	240	330	16	100	12	244	15	320	1 643	1 264	4 718
HRC 120×40	120	40	8 000	122,6	112	240	330	16	100	12	244	15	320	1 655	1 273	4 726

Continued

*mol = maximum operating load
Note: All other dimensions can be found in the SKF roller screws catalog. Please contact SKF.

Symbols, see **page 191**

HRC - Range
(*Continued*)

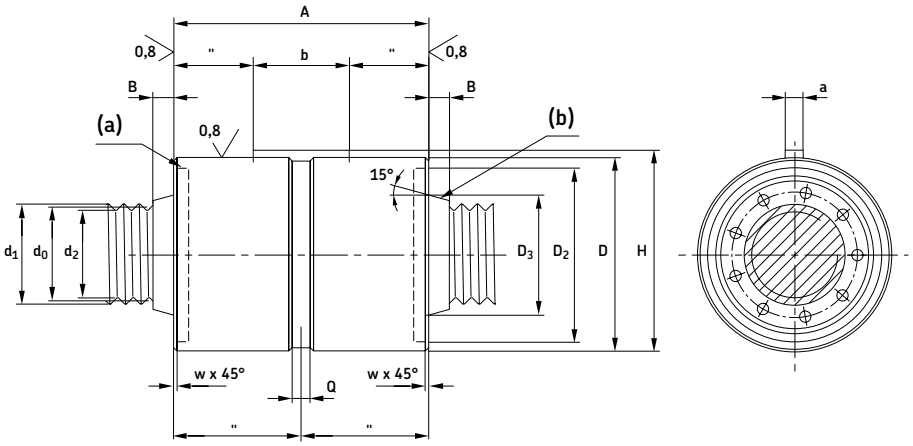

Legend:
(a) = wiper recess
(b) = wiper

Designations	Dimensions													Basic load ratings dynamic		static
	d_0	P_h	l_{tp}	d_1	d_2	D g6/H7	A h12	a h9	b	B	H	Q	F_a	C_a mol* ≤ Fa	C_a mol* > Fa	C_{oa}
	mm												kN			
HRC 135×15	135	15	8 000	136,1	133,6	280	370	28	120	11,5	286	15	410	1 847	1 421	6 028
HRC 135×20	135	20	8 000	136,5	131,1	280	370	28	120	11,5	286	15	410	1 862	1 432	5 941
HRC 135×25	135	25	8 000	136,8	130,1	280	370	28	120	11,5	286	15	410	1 907	1 467	6 044
HRC 135×30	135	30	8 000	137,1	129,1	280	370	28	120	11,5	286	15	410	1 908	1 468	5 957
HRC 135×35	135	35	8 000	137,4	128	280	370	28	120	11,5	286	15	410	1 925	1 481	5 965
HRC 135×40	135	40	8 000	137,7	127	280	370	28	120	11,5	286	15	410	1 914	1 472	5 847
HRC 150×15	150	15	7 200	151,1	148,6	320	412	32	160	12,5	327	15	480	2 160	1 600	7 182
HRC 150×20	150	20	7 200	151,5	146,1	320	412	32	160	12,5	327	15	480	2 199	1 629	7 190
HRC 150×25	150	25	7 200	151,8	145,1	320	412	32	160	12,5	327	15	480	2 223	1 647	7 164
HRC 150×30	150	30	7 200	152,1	144,1	320	412	32	160	12,5	327	15	480	2 255	1 670	7 208
HRC 150×35	150	35	7 200	152,4	143,1	320	412	32	160	12,5	327	15	480	2 255	1 670	7 113
HRC 150×40	150	40	7 200	152,7	142	320	412	32	160	12,5	327	15	480	2 265	1 678	7 086
HRC 180×15	180	15	5 000	181,1	178,6	390	496	32	160	15	397	20	750	3 017	2 235	11 939
HRC 180×20	180	20	5 000	181,5	176,1	390	496	32	160	15	397	20	750	3 066	2 271	11 907
HRC 180×25	180	25	5 000	181,8	175,1	390	496	32	160	15	397	20	750	3 124	2 314	12 003
HRC 180×30	180	30	5 000	182,1	174,1	390	496	32	160	15	397	20	750	3 131	2 319	11 842
HRC 180×35	180	35	5 000	182,5	173,1	390	496	32	160	15	397	20	750	3 146	2 330	11 767
HRC 180×40	180	40	5 000	182,8	172,1	390	496	32	160	15	397	20	750	3 200	2 370	11 949
HRC 210×20	210	20	3 700	211,4	208,1	440	570	40	200	15	450	20	950	3 550	2 630	14 742
HRC 210×30	210	30	3 700	212,1	207,2	440	570	40	200	15	450	20	950	3 611	2 675	14 570
HRC 210×40	210	40	3 700	212,9	206,3	440	570	40	200	15	450	20	950	3 707	2 746	14 792

*mol = maximum operating load
Note: All other dimensions can be found in the SKF roller screws catalog. Please contact SKF.

Symbols, see **page 191**

3 Ball & roller screws
Roller screws

HRF - Range

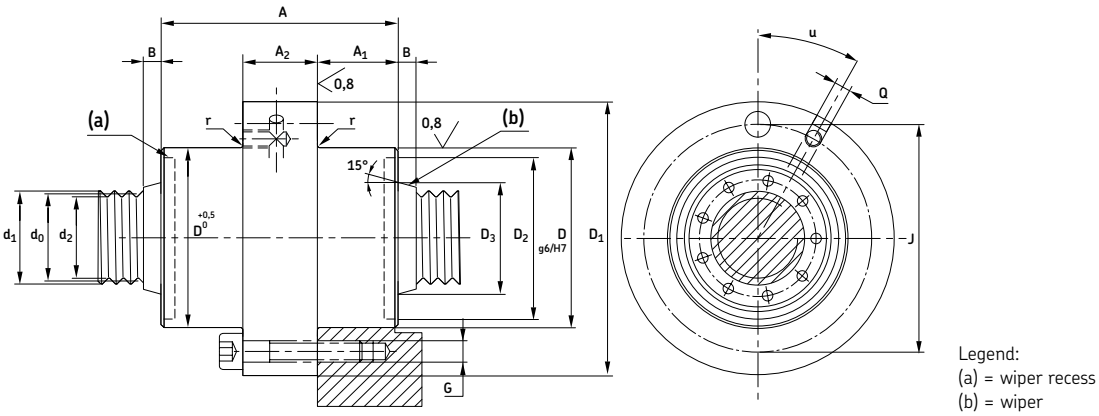

Legend:
(a) = wiper recess
(b) = wiper

Designations	Dimensions														Basic load ratings dynamic		static
	Lead																
	d_0	P_h	l_{tp}	d_1	d_2	D g6/H7	A h12	A_2	D_1	J js12	B	G	Q	Fa	C_a mol* ≤ Fa	C_a mol* > Fa	C_{oa}
	mm													kN			
HRF 60×15	60	15	4 250	61,1	58,5	122	171	30	166	146	9	8×M12	M8×1	90	545	495	1 206
HRF 60×20	60	20	4 250	61,3	56	122	171	30	166	146	9	8×M12	M8×1	90	568	516	1 181
HRF 60×25	60	25	4 250	61,6	54,9	122	171	30	166	146	9	8×M12	M8×1	90	548	498	1 115
HRF 60×30	60	30	4 250	61,8	53,8	122	171	30	166	146	9	8×M12	M8×1	90	547	497	1 105
HRF 75×15	75	15	5 500	76,1	73,5	150	213	35	195	174	10	12×M12	M8×1	130	772	643	1 855
HRF 75×20	75	20	5 500	76,4	71	150	213	35	195	174	10	12×M12	M8×1	130	781	651	1 842
HRF 75×25	75	25	5 500	76,7	70	150	213	35	195	174	10	12×M12	M8×1	130	791	659	1 846
HRF 75×30	75	30	5 500	76,9	68,9	150	213	35	195	174	10	12×M12	M8×1	130	788	657	1 815
HRF 87×15	87	15	6 000	88,1	85,5	175	245	40	220	200	12	12×M12	M8×1	180	979	816	2 645
HRF 87×20	87	20	6 000	88,4	83	175	245	40	220	200	12	12×M12	M8×1	180	982	818	2 589
HRF 87×25	87	25	6 000	88,7	82	175	245	40	220	200	12	12×M12	M8×1	180	1 004	837	2 635
HRF 87×30	87	30	6 000	89	81	175	245	40	220	200	12	12×M12	M8×1	180	1 003	836	2 599
HRF 99×15	99	15	7 500	100,1	97,5	200	280	50	245	224	12	12×M12	M8×1	240	1 231	985	3 503
HRF 99×20	99	20	7 500	100,4	95	200	280	50	245	224	12	12×M12	M8×1	240	1 263	1 010	3 556
HRF 99×25	99	25	7 500	100,7	94	200	280	50	245	224	12	12×M12	M8×1	240	1 280	1 024	3 561
HRF 99×30	99	30	7 500	101	93	200	280	50	245	224	12	12×M12	M8×1	240	1 281	1 025	3 520
HRF 99×35	99	35	7 500	101,3	91,9	200	280	50	245	224	12	12×M12	M8×1	240	1 281	1 025	3 479
HRF 112,5×15	112,5	15	7 500	113,6	111,1	230	300	50	286	260	12	12×M16	M12×1,75	290	1 425	1 140	4 327
HRF 112,5×20	112,5	20	7 500	113,9	108,6	230	300	50	286	260	12	12×M16	M12×1,75	290	1 451	1 161	4 334
HRF 112,5×25	112,5	25	7 500	114,2	107,5	230	300	50	286	260	12	12×M16	M12×1,75	290	1 393	1 114	4 006
HRF 112,5×30	112,5	30	7 500	114,5	106,5	230	300	50	286	260	12	12×M16	M12×1,75	290	1 401	1 121	3 986
HRF 112,5×35	112,5	35	7 500	114,8	105,5	230	300	50	286	260	12	12×M16	M12×1,75	290	1 408	1 126	3 967
HRF 120×15	120	15	8 000	121,1	118,6	240	330	55	296	270	12	12×M16	M12×1,75	320	1 550	1 192	4 635
HRF 120×20	120	20	8 000	121,4	116,1	240	330	55	296	270	12	12×M16	M12×1,75	320	1 590	1 223	4 697
HRF 120×25	120	25	8 000	121,8	115,1	240	330	55	296	270	12	12×M16	M12×1,75	320	1 587	1 221	4 592
HRF 120×30	120	30	8 000	122,1	114	240	330	55	296	270	12	12×M16	M12×1,75	320	1 616	1 243	4 656
HRF 120×35	120	35	8 000	122,3	113	240	330	55	296	270	12	12×M16	M12×1,75	320	1 643	1 264	4 718
HRF 120×40	120	40	8 000	122,6	112	240	330	55	296	270	12	12×M16	M12×1,75	320	1 655	1 273	4 726

Continued

*mol = maximum operating load
Note: All other dimensions can be found in the SKF roller screws catalog. Please contact SKF.

Symbols, see **page 191**

HRF - Range
(*Continued*)

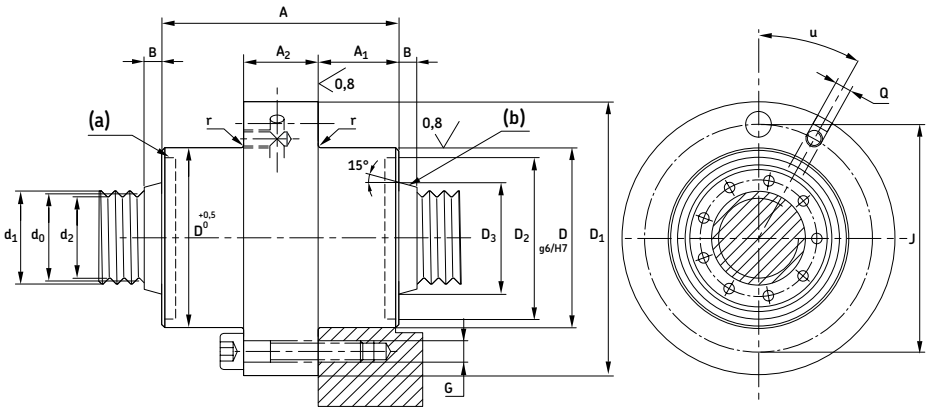

Legend:
(a) = wiper recess
(b) = wiper

Designations	Dimensions														Basic load ratings dynamic		static
	Lead																
	d_0	P_h	l_{tp}	d_1	d_2	D g6/H7	A h12	A_2	D_1	J js12	B	G	Q	Fa	C_a mol* ≤ Fa	C_a mol* > Fa	C_{oa}
	mm													kN			
HRF 135×15	135	15	8 000	136,1	133,6	280	370	60	345	315	11,5	12×M18	M12×1,75	410	1 847	1 421	6 028
HRF 135×20	135	20	8 000	136,5	131,1	280	370	60	345	315	11,5	12×M18	M12×1,75	410	1 862	1 432	5 941
HRF 135×25	135	25	8 000	136,8	130,1	280	370	60	345	315	11,5	12×M18	M12×1,75	410	1 907	1 467	6 044
HRF 135×30	135	30	8 000	137,1	129,1	280	370	60	345	315	11,5	12×M18	M12×1,75	410	1 908	1 468	5 957
HRF 135×35	135	35	8 000	137,4	128	280	370	60	345	315	11,5	12×M18	M12×1,75	410	1 925	1 481	5 965
HRF 135×40	135	40	8 000	137,7	127	280	370	60	345	315	11,5	12×M18	M12×1,75	410	1 914	1 472	5 847
HRF 150×15	150	15	7 200	151,1	148,6	320	412	70	385	355	12,5	12×M18	M12×1,75	480	2 160	1 600	7 182
HRF 150×20	150	20	7 200	151,5	146,1	320	412	70	385	355	12,5	12×M18	M12×1,75	480	2 199	1 629	7 190
HRF 150×25	150	25	7 200	151,8	145,1	320	412	70	385	355	12,5	12×M18	M12×1,75	480	2 223	1 647	7 164
HRF 150×30	150	30	7 200	152,1	144,1	320	412	70	385	355	12,5	12×M18	M12×1,75	480	2 255	1 670	7 208
HRF 150×35	150	35	7 200	152,4	143,1	320	412	70	385	355	12,5	12×M18	M12×1,75	480	2 255	1 670	7 113
HRF 150×40	150	40	7 200	152,7	142	320	412	70	385	355	12,5	12×M18	M12×1,75	480	2 265	1 678	7 086
HRF 180×15	180	15	5 000	181,1	178,6	390	496	90	470	433	15	12×M22	M12×1,75	750	3 017	2 235	11 939
HRF 180×20	180	20	5 000	181,5	176,1	390	496	90	470	433	15	12×M22	M12×1,75	750	3 066	2 271	11 907
HRF 180×25	180	25	5 000	181,8	175,1	390	496	90	470	433	15	12×M22	M12×1,75	750	3 124	2 314	12 003
HRF 180×30	180	30	5 000	182,1	174,1	390	496	90	470	433	15	12×M22	M12×1,75	750	3 131	2 319	11 842
HRF 180×35	180	35	5 000	182,5	173,1	390	496	90	470	433	15	12×M22	M12×1,75	750	3 146	2 330	11 767
HRF 180×40	180	40	5 000	182,8	172,1	390	496	90	470	433	15	12×M22	M12×1,75	750	3 200	2 370	11 949
HRF 210×20	210	20	3 700	211,4	208,1	440	570	100	530	490	15	12×M24	M12×1,76	950	3 550	2 630	14 742
HRF 210×30	210	30	3 700	212,1	207,2	440	570	100	530	490	15	12×M24	M12×1,77	950	3 611	2 675	14 570
HRF 210×40	210	40	3 700	212,9	206,3	440	570	100	530	490	15	12×M24	M12×1,78	950	3 707	2 746	14 792

*mol = maximum operating load
Note: All other dimensions can be found in the SKF roller screws catalog. Please contact SKF.

Symbols, see **page 191**

3 Ball & roller screws
Roller screws

HRP - Range

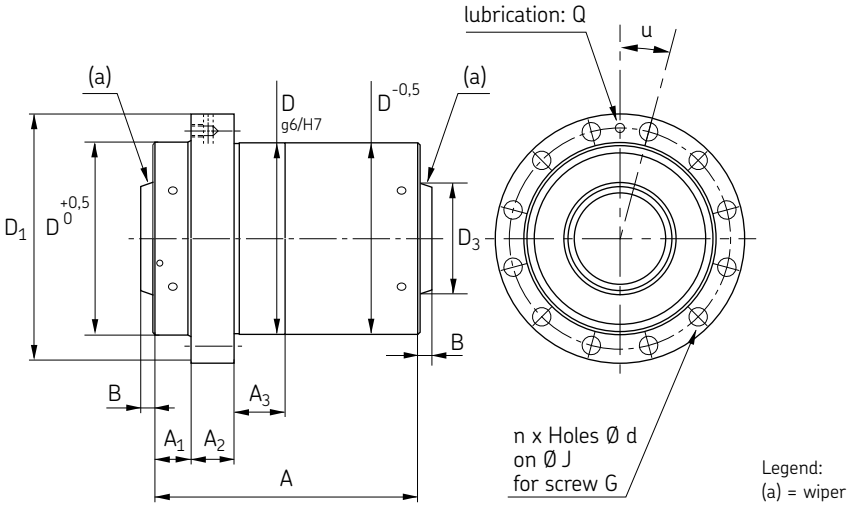

Designations	Dimensions													Basic load ratings dynamic		static
	Lead															
	d_0	P_h	l_{tp}	d_1	d_2	D g6/H7	A h12	A_2	D_1	J js12	G	Q	Fa	C_a mol* ≤ Fa	C_a mol* > Fa	C_{oa}
	mm												kN			
HRP 60×15	60	15	4 250	61,1	58,5	122	171	30	166	146	8×M12	M8×1	90	545	495	1 206
HRP 60×20	60	20	4 250	61,3	56	122	171	30	166	146	8×M12	M8×1	90	568	516	1 181
HRP 60×25	60	25	4 250	61,6	54,9	122	171	30	166	146	8×M12	M8×1	90	548	498	1 115
HRP 60×30	60	30	4 250	61,8	53,8	122	171	30	166	146	8×M12	M8×1	90	547	497	1 105
HRP 75×15	75	15	5 500	76,1	73,5	150	213	35	195	174	12×M12	M8×1	130	772	643	1 855
HRP 75×20	75	20	5 500	76,4	71	150	213	35	195	174	12×M12	M8×1	130	781	651	1 842
HRP 75×25	75	25	5 500	76,7	70	150	213	35	195	174	12×M12	M8×1	130	791	659	1 846
HRP 75×30	75	30	5 500	76,9	68,9	150	213	35	195	174	12×M12	M8×1	130	788	657	1 815
HRP 87×15	87	15	6 000	88,1	85,5	175	245	40	220	200	12×M12	M8×1	180	979	816	2 645
HRP 87×20	87	20	6 000	88,4	83	175	245	40	220	200	12×M12	M8×1	180	982	818	2 589
HRP 87×25	87	25	6 000	88,7	82	175	245	40	220	200	12×M12	M8×1	180	1 004	837	2 635
HRP 87×30	87	30	6 000	89	81	175	245	40	220	200	12×M12	M8×1	180	1 003	836	2 599
HRP 99×15	99	15	7 500	100,1	97,5	200	280	50	245	224	12×M12	M8×1	240	1 231	985	3 503
HRP 99×20	99	20	7 500	100,4	95	200	280	50	245	224	12×M12	M8×1	240	1 263	1 010	3 556
HRP 99×25	99	25	7 500	100,7	94	200	280	50	245	224	12×M12	M8×1	240	1 280	1 024	3 561
HRP 99×30	99	30	7 500	101	93	200	280	50	245	224	12×M12	M8×1	240	1 281	1 025	3 520
HRP 99×35	99	35	7 500	101,3	91,9	200	280	50	245	224	12×M12	M8×1	240	1 281	1 025	3 479
HRP 112,5×15	112,5	15	7 500	113,6	111,1	230	300	50	286	260	12×M16	M12×1,75	290	1 425	1 140	4 327
HRP 112,5×20	112,5	20	7 500	113,9	108,6	230	300	50	286	260	12×M16	M12×1,75	290	1 451	1 161	4 334
HRP 112,5×25	112,5	25	7 500	114,2	107,5	230	300	50	286	260	12×M16	M12×1,75	290	1 393	1 114	4 006
HRP 112,5×30	112,5	30	7 500	114,5	106,5	230	300	50	286	260	12×M16	M12×1,75	290	1 401	1 121	3 986
HRP 112,5×35	112,5	35	7 500	114,8	105,5	230	300	50	286	260	12×M16	M12×1,75	290	1 408	1 126	3 967
HRP 120×15	120	15	8 000	121,1	118,6	240	330	55	296	270	12×M16	M12×1,75	320	1 550	1 192	4 635
HRP 120×20	120	20	8 000	121,4	116,1	240	330	55	296	270	12×M16	M12×1,75	320	1 590	1 223	4 697
HRP 120×25	120	25	8 000	121,8	115,1	240	330	55	296	270	12×M16	M12×1,75	320	1 587	1 221	4 592
HRP 120×30	120	30	8 000	122,1	114	240	330	55	296	270	12×M16	M12×1,75	320	1 616	1 243	4 656
HRP 120×35	120	35	8 000	122,3	113	240	330	55	296	270	12×M16	M12×1,75	320	1 643	1 264	4 718
HRP 120×40	120	40	8 000	122,6	112	240	330	55	296	270	12×M16	M12×1,75	320	1 655	1 273	4 726

Continued

*mol = maximum operating load
Note: All other dimensions can be found in the SKF roller screws catalog. Please contact SKF.

Symbols, see **page 191**

HRP - Range
(*Continued*)

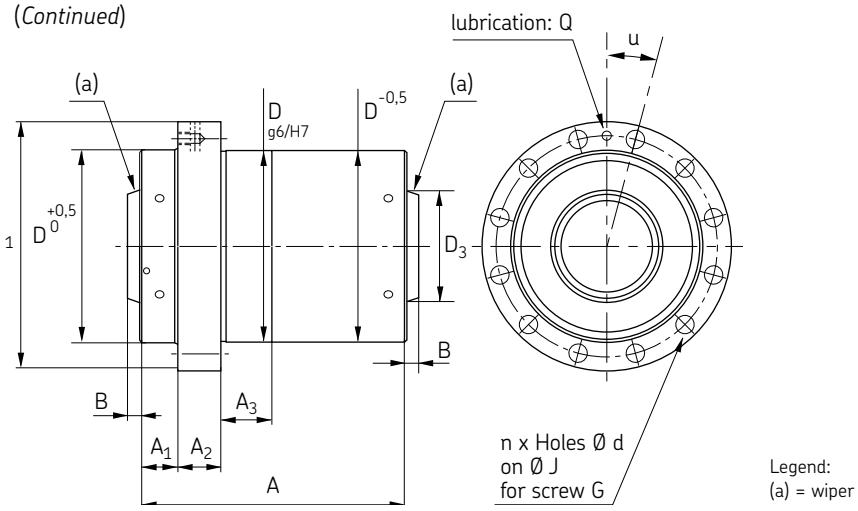

Designations	Dimensions													Basic load ratings		
	Lead													dynamic		static
	d_0	P_h	l_{tp}	d_1	d_2	D g6/H7	A h12	A_2	D_1	J js12	G	Q	Fa	C_a mol* ≤ Fa	C_a mol* > Fa	C_{oa}
	mm												kN			
HRP 135×15	135	15	8 000	136,1	133,6	280	370	60	345	315	12×M18	M12×1,75	410	1 847	1 421	6 028
HRP 135×20	135	20	8 000	136,5	131,1	280	370	60	345	315	12×M18	M12×1,75	410	1 862	1 432	5 941
HRP 135×25	135	25	8 000	136,8	130,1	280	370	60	345	315	12×M18	M12×1,75	410	1 907	1 467	6 044
HRP 135×30	135	30	8 000	137,1	129,1	280	370	60	345	315	12×M18	M12×1,75	410	1 908	1 468	5 957
HRP 135×35	135	35	8 000	137,4	128	280	370	60	345	315	12×M18	M12×1,75	410	1 925	1 481	5 965
HRP 135×40	135	40	8 000	137,7	127	280	370	60	345	315	12×M18	M12×1,75	410	1 914	1 472	5 847
HRP 150×15	150	15	7 200	151,1	148,6	320	412	70	385	355	12×M18	M12×1,75	480	2 160	1 600	7 182
HRP 150×20	150	20	7 200	151,5	146,1	320	412	70	385	355	12×M18	M12×1,75	480	2 199	1 629	7 190
HRP 150×25	150	25	7 200	151,8	145,1	320	412	70	385	355	12×M18	M12×1,75	480	2 223	1 647	7 164
HRP 150×30	150	30	7 200	152,1	144,1	320	412	70	385	355	12×M18	M12×1,75	480	2 255	1 670	7 208
HRP 150×35	150	35	7 200	152,4	143,1	320	412	70	385	355	12×M18	M12×1,75	480	2 255	1 670	7 113
HRP 150×40	150	40	7 200	152,7	142	320	412	70	385	355	12×M18	M12×1,75	480	2 265	1 678	7 086
HRP 180×15	180	15	5 000	181,1	178,6	390	496	90	470	433	12×M22	M12×1,75	750	3 017	2 235	11 939
HRP 180×20	180	20	5 000	181,5	176,1	390	496	90	470	433	12×M22	M12×1,75	750	3 066	2 271	11 907
HRP 180×25	180	25	5 000	181,8	175,1	390	496	90	470	433	12×M22	M12×1,75	750	3 124	2 314	12 003
HRP 180×30	180	30	5 000	182,1	174,1	390	496	90	470	433	12×M22	M12×1,75	750	3 131	2 319	11 842
HRP 180×35	180	35	5 000	182,5	173,1	390	496	90	470	433	12×M22	M12×1,75	750	3 146	2 330	11 767
HRP 180×40	180	40	5 000	182,8	172,1	390	496	90	470	433	12×M22	M12×1,75	750	3 200	2 370	11 949
HRP 210×20	210	20	3 700	211,4	208,1	440	570	100	530	490	12×M24	M12×1,75	950	3 550	2 630	14 742
HRP 210×30	210	30	3 700	212,1	207,2	440	570	100	530	490	12×M24	M12×1,75	950	3 611	2 675	14 570
HRP 210×40	210	40	3 700	212,9	206,3	440	570	100	530	490	12×M24	M12×1,75	950	3 707	2 746	14 792

*mol = maximum operating load
Note: All other dimensions can be found in the SKF roller screws catalog. Please contact SKF.

Symbols, see **page 191**

3 Ball & roller screws
Roller screws

Rotating nut roller screws
(figs. 21 and 22)

With this design based on planetary roller screw technology, the nut rotates inside bearings. The electric motor drives the nut via a tension belt, and the nut assembly moves along the fixed screw shaft.

Features
- 72 series angular contact bearings are directly mounted on the nut outer diameter
- Bearings are preloaded in back-to-back arrangement in order to fully support the moment created by the belt tension
- 2 Nilos rings protect the bearings against pollution and permit lubrication for life
- Wipers are mounted at each end of the nut in the standard configuration for better protection against contamination
- The screw assembly is lubricated through a nipple mounted on the housing external diameter, with standard SKF LGEP2, or according to customer specifications
- Two versions are available:
  - SRR: with axial play
  - BRR: with backlash elimination

Benefits
- Compact solution ready for use in machinery
- Simplified enginering for machine builders
- Acceleration up to 12 000 rad/sec^2
- Maximum speed n x d_0 up to 160 000

Application examples
- Production processes in automotive industry (servo-presses, tube bending, forming, locking devices, etc.)
- Process in injection moulding industry (part ejection)

Fig. 21

Fig. 22

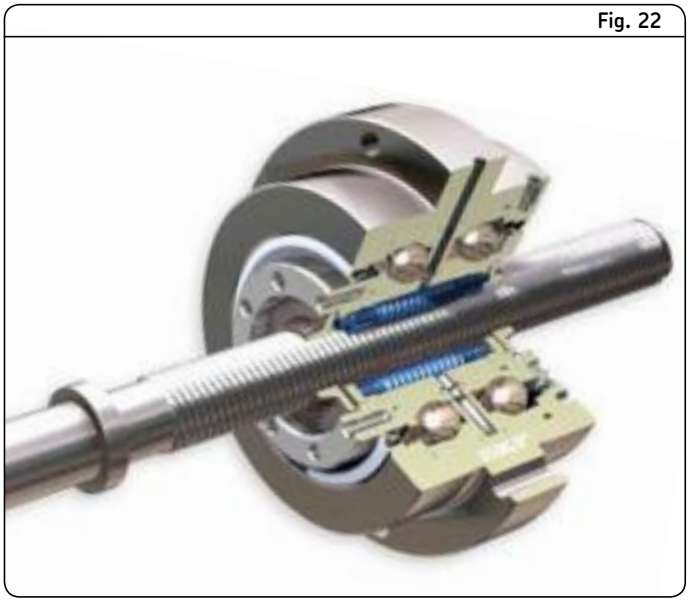

N.B.:
If you need more information, please contact SKF sales office.

N.B.:
In addition to this catalogue, all product brochures are available on **www.skf.com** *as PDF files.*

Designations	Lead Ph
	mm
SRR/BRR 25 x Ph-R5	5/10/15
SRR/BRR 30 x Ph-R5	5/10/15/20
SRR/BRR 39 x Ph-R5	5/10/15/20/25
SRR/BRR 48 x Ph-R5	5/10/15/20/25
SRR/BRR 60 x Ph-R5	5/10/15/20/25/30

Inverted roller screws
(figs. 23 and 24)

The inverted roller screw represents a unique design variant of the planetary roller screw.

Features
- The compact inverted roller screw works on the same principle as a planetary roller screw, with the roller's rotation being synchronized with the threaded shaft through toothed rings
- Either nut or shaft can be rotated by an electric motor, the non rotating component thus acting as the push tube of an actuator.
- The application loads acting on the translating push tube transit through the planetary rollers to the rotating shaft or nut
- Toothed rings and guiding rings ensure the rolling motion and an even circumferential position of the rollers, to perfectly distribute the load and to eliminate any parasitic friction between rollers

Benefits
- Very small lead, down to 1,00 mm, while providing a high load carrying capacity and high axial stiffness
- High speed capability, identical to that of planetary roller screws
- Guiding and sealing functions easily integrated on smooth surface of nut or shaft resulting in high performance sealing
- Compactness attachment between electric rotor and screw components, and easy rotor integration
- Screw or nut directly used as push tube
- Long service life and increased reliability improving customer installation productivity
- Reduced requirements for electric motor torque to reach high load actuation
- Environmentally friendly solution

Typical applications
SKF compact inverted roller screws are designed to provide powerful electromechanical actuation where compactness and high load capability are prerequisites. The compact inverted roller screw, incorporated inside an electromechanical actuator, can advantageously replace hydraulic or pneumatic actuation, providing the benefits of electronic control.

Fig. 23

SKF compact inverted roller screw view with electric motor and bearings

Fig. 24

Application examples
- Factory automation
- Welding guns
- Oil and gas sub-sea equipment
- Aerospace

N.B.:
If you need more information, please contact SKF sales office.

Roller screws service range

For reduced delivery time, SKF offers 3 options that are available for both types of planetary and recirculating roller screws.

1) Standard nuts in stock
Selected types of roller screw nuts are stocked to reduce the delivery time of roller screws. With such option, screw shafts are not stocked and will be manufactured on demand. Please see **pages 182-183**.

2) Standard nuts and screw shafts in stock
With this option, selected types of roller screw nuts already fitted on pre-machined shafts are stocked at the factory. Within the defined dimensions of the stocked screw shafts, ends can be machined according to customer requirements. This option allows for a delivery time that is further reduced compared to the first option with only standard nuts in stock, although with more limitations to the screw shafts dimensions. Please see **pages 184-185**.

3) Complete roller screw assemblies with flanged thrust bearing unit (**fig. 25**)
This is a further development of options with standard nuts and screw shafts in stock.With this option, the stocked screw shafts have been machined at one end, and fitted with a flanged thrust bearing unit (support bearing with angular contact ball bearings, also known as FLRBU). These assemblies for quick delivery are only available with the standard design of FLRBU bearing assortment (please refer to the SKF roller screw catalogue). Please see **pages 186-187**.

Fig. 25

Roller screws service range

General rules

Quantity	• Maximum 3 pieces for planetary and recirculating roller screws. • Maximum 5 pieces for service range option 2 with roller screw nuts and screw shafts in stock, premachined shafts for machining by the customer.
Materials	• Both shafts and nuts should be made of standard steel (refer to our latest roller screws catalogue). Neither stainless steel nor special treatments are accepted through this quick service channel.
Capabilities	• Standard nuts with axial play, backlash elimination or preload. • Standard machining: no spline, no hollow shaft, no radius in grinding operations. If there are such requirements, order cannot be accepted by the service channel. • Unless specified, tolerances will be according to class 5, ISO 3408-3 (see roller screws catalogue). • FLRBU thrust support bearings can be delivered from FLRBU 1 to FLRBU 6 sizes. • Lead precision: G5 according to ISO standard. • Lubrication: screw assemblies delivered with machined ends are greased with SKF LGEP2 (temperature range: –20 °C to +120 °C). Without end machining, they are only protected with rust inhibitor.
IMPORTANT	• Screws for nuclear, aerospace, military or medical applications are excluded. • Special documents such as conformity report cannot be included.

N.B.:
If you need more information, please contact SKF sales office.

3 Ball & roller screws
Roller screws service range

Service range option 1
Planetary roller screw standard nuts in stock

Nut in stock

Short delivery time possible

- Without machined ends
- With machined ends according to customer drawing

Nuts

- With axial play: SRC – SRF
- Preloaded for optimum rigidity: PRU – PRK

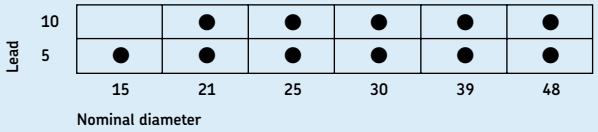

Capabilities

Machined ends: • according to customer drawing (see general rules)

Screw dimensions: • up to 1 500 mm maximum length
• up to 900 mm threaded length.

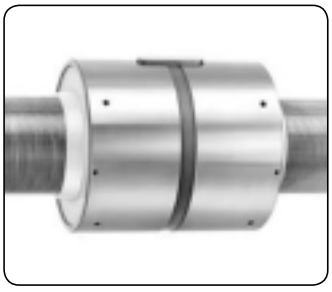
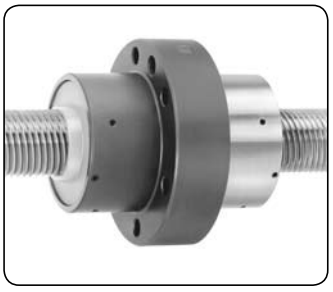

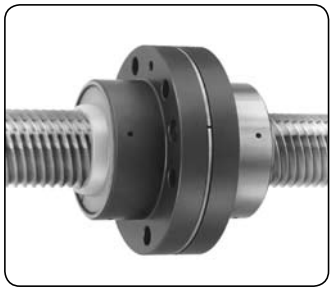

d_0	P_h	N	C_a SRC/SRF	C_a PRU/PRK	C_{0a} SRC/SRF	C_{0a} PRU/PRK
mm						
15	5	5	25,9	14,3	43,5	21,8
21	5	5	50,5	27,8	81,9	40,9
21	10	5	59,2	32,6	83,0	41,5
25	5	5	63,2	34,8	108,2	54,1
25	10	5	72,6	40,0	105,3	52,6
30	5	5	91,9	50,6	178,3	89,1
30	10	5	106,3	58,5	174,3	87,1
39	5	5	129,2	71,1	268,9	134,4
39	10	5	152,6	84,0	270,9	135,4
48	5	5	198,0	109,1	481,5	240,7
48	10	5	231,5	127,5	475,1	237,5

N.B.:
If you need more information, please contact SKF sales office.

Service range option 1
Recirculating roller screw standard nuts in stock

Nut in stock

Short delivery time possible

- Without machined ends
- With machined ends according to customer drawing

Nuts

- With axial play: SVC
- Preloaded for optimum rigidity: PVU – PVK

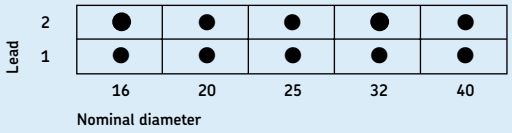

Capabilities

Machined ends: • according to customer drawing (see general rules)

Screw dimensions: • up to 1 500 mm maximum length
• up to 900 mm threaded length.

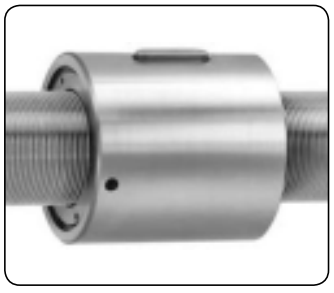

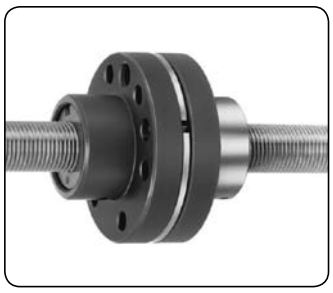

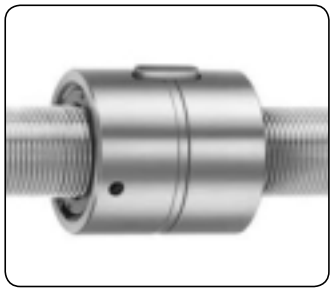

d_0	P_h	N	C_a SVC	C_a PVU/PVK	C_{0a} SVC	C_{0a} PVU/PVK
mm						
16	1	1	11,5	6,6	16,8	8,4
16	2	2	11,5	6,6	16,8	8,4
20	1	1	18,5	10,6	36,6	18,3
20	2	2	18,5	10,6	36,6	18,3
25	1	1	32,9	18,9	68,4	34,2
25	2	2	32,9	18,9	68,4	34,2
32	1	1	64,3	36,9	159,2	79,6
32	2	2	64,3	36,9	159,2	79,6
40	1	1	79,1	45,4	231,6	115,8
40	2	1	49,9	28,7	117,2	58,6

N.B.:
If you need more information, please contact SKF sales office.

3 Ball & roller screws
Roller screws service range

Service range option 2
Planetary roller screw nuts and screw shafts in stock

BRC - Range

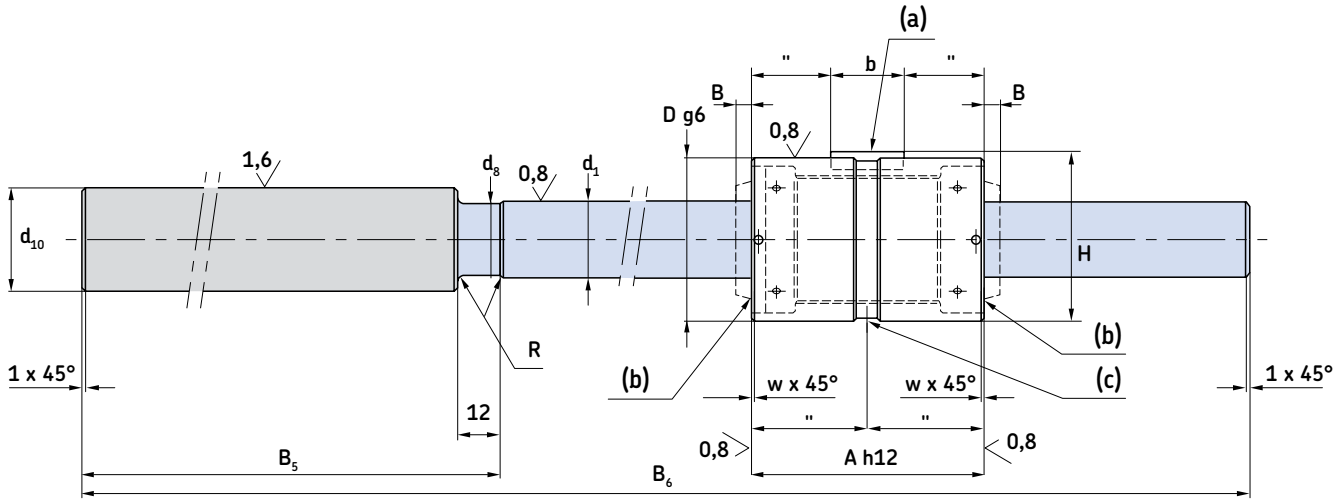

Legend:
(a) = key
(b) = wiper
(c) = lubrication hole Q

Screw ends can be machined according to customer requirements

Maximum threaded length: can be cut and machined according to customer requirements

Features
- Nut preloaded for backlash elimination: BRC
- Lead precision G5 according to ISO standard
- Preload torque measured at 50 rpm and using SKF LGEP2 lubricant

Capabilities for machined ends
- Premachined shafts for machining by the customer. Maximum 5 pieces per order line
- According to customer drawing (see general rules). Maximum 3 pieces per order line.

Designations	Dimensions						Basic load ratings dynamic	static
	d_0	B_6	d_{10}	B_5	D	A	C_a	C_{oa}
	mm						kN	
BRC 15×5-R5	15	400	25	115	35	50	25,9	43,5
BRC 21×5-R5	21	570	40	178	45	64	50,5	81,9
BRC 30×5-R5	30	800	50	213	64	85	91,9	178,3
BRC 39×5-R5	39	1 046	70	259	80	100	129,2	268,9

Symbols, see **page 191**

Service range option 2
Recirculating roller screw nuts and screw shafts in stock

BVC - Range

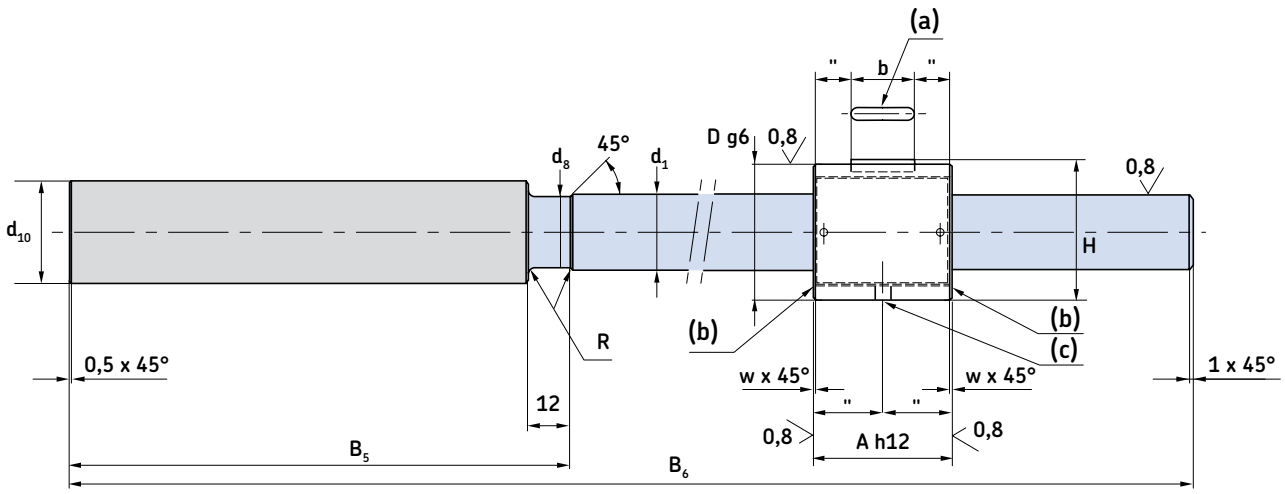

Legend:
(a) = key
(b) = no wiper
(c) = lubrication hole Q

Screw ends can be machined to customer requirements

Maximum threaded length: can be cut and machined to customer requirements

Features

- Nut preloaded for backlash elimination: BVC
- Lead precision G5 according to ISO standard
- Preload torque measured at 50 rpm and using SKF LGEP2 lubricant

Capabilities for machined ends

- Premachined shafts for machining by the customer. Maximum 5 pieces per order line
- According to customer drawing (see general rules). Maximum 3 pieces per order line.

Designations	Dimensions						Basic load ratings dynamic	static
	d_0	B_6	d_{10}	B_5	D	A	C_a	C_{oa}
	mm						kN	
BVC 20×1-R1	20	400	28	116	34	37	18,5	36,6
BVC 25×1-R1	25	500	33	159	42	44	32,9	68,4
BVC 32×1-R1	32	500	40	179	54	57	64,3	159,2

Symbols, see **page 191**

3 Ball & roller screws
Roller screws service range

Service range option 3
Complete planetary roller screw assemblies with FLRBU

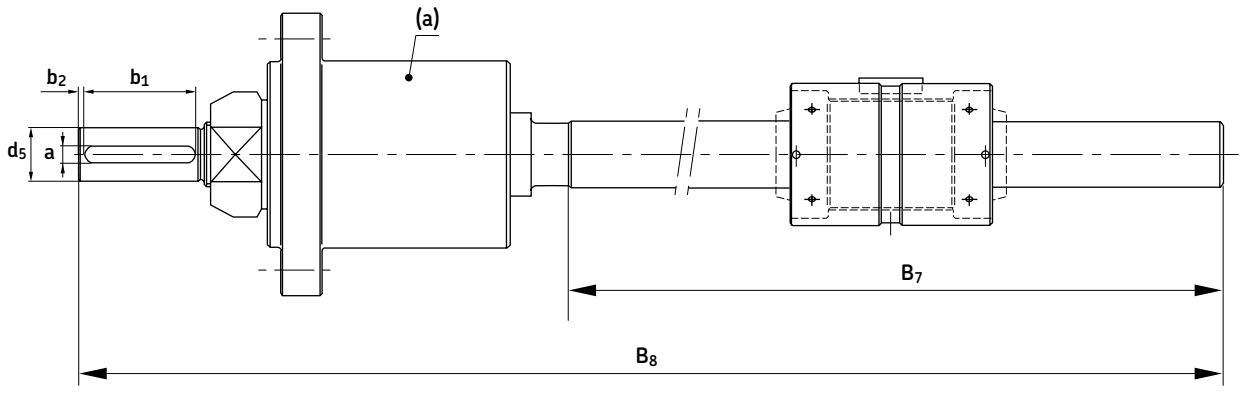

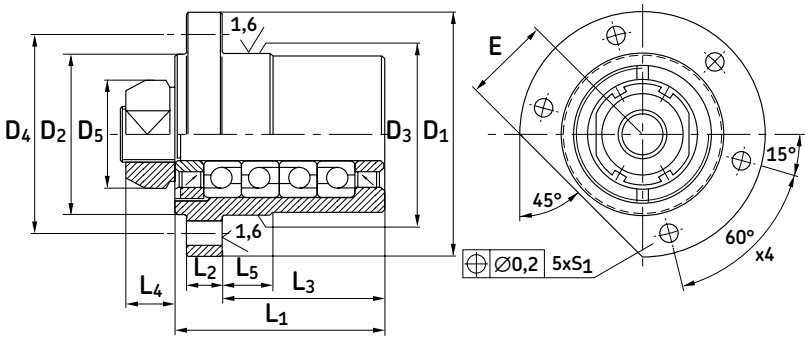

Legend:
(a) = Thrust bearing unit FLRBU

Features
- Nut preloaded for backlash elimination: BRC
- Lead precision G5 according to ISO standard
- Preload torque measured at 50 rpm and using SKF LGEP2 lubricant
- Nut and thrust bearing unit cannot be modified
- The flange of the thrust bearing unit is located on the KMT nut side

Designations	Dimensions														Basic load ratings dynamic	static
	d_0	B_7	B_8	L_1	L_2	L_3	D_1	D_3	D_4	E	d_5 h7	a N9	b_1 +0,5 0	b_2	C_a	C_{oa}
	mm														kN	
FLRBU2/BRC 15×5-R5	15	285	398	46	10	32	90	60	76	32	15	5	25	2,0	27,9	31,9
FLRBU4/BRC 21×5-R5	21	392	568	77	13	60	90	60	74	32	20	6	40	2,5	40,1	63,8
FLRBU5/BRC 30×5-R5	30	587	798	89	16	68	120	80	100	44	30	8	45	2,5	74,2	119,2
FLRBU6/BRC 39×5-R5	39	787	1 044	110	20	82	140	100	120	54	40	12	55	4,0	109,4	188,4

Symbols, see **page 191**

Service range option 3
Complete recirculating roller screw assemblies with FLRBU

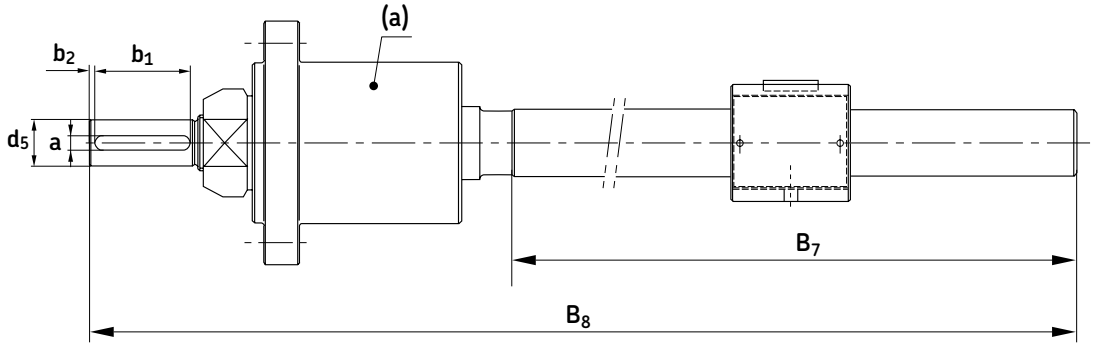

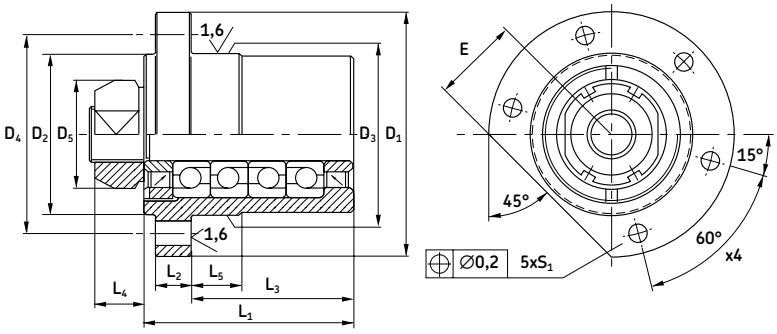

Legend:
(a) = Thrust bearing unit FLRBU

Features

- Nut preloaded for backlash elimination: BVC
- Lead precision G5 according to ISO standard
- Preload torque measured at 50 rpm and using SKF LGEP2 lubricant
- Nut and thrust bearing unit cannot be modified
- The flange of the thrust bearing unit is located on the KMT nut side

Designations	Dimensions														Basic load ratings dynamic	static
	d_0	B_7	B_8	L_1	L_2	L_3	D_1	D_3	D_4	E	d_5 h7	a N9	b_1 +0,5 0	b_2	C_a	C_{oa}
	mm														kN	
FLRBU2/BVC 20×1-R1	20	284	397	46	10	32	90	60	76	32	15	5	25	2,0	27,9	31,9
FLRBU3/BVC 25×1-R1	25	341	497	77	13	60	90	60	74	32	17	5	35	2,0	40,1	63,8
FLRBU4/BVC 32×1-R1	32	321	497	89	16	68	120	80	100	44	20	6	40	2,5	74,2	119,2

Symbols, see **page 191**

Accessories for roller screws

Flanged thrust bearing units FLRBU.
In standard version, the FLRBU thrust bearing units are assembled according to these drawings.

If you require a different assembly, please indicate it when ordering. These units are greased for life with SKF LGEP2.

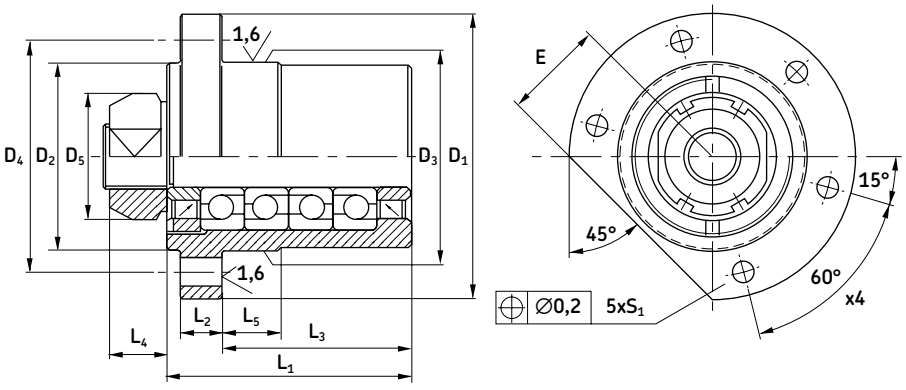

Angular contact ball bearing (40°)													High precision KMT nut				
Designations	**Dimensions**										**Attachment screw**	**Angular contact**	**Designation**	**Hook spanner**	**Tightening torque**	**Grub screws Size**	**Max. tightening torque**
	L_1	L_2	L_3	L_4	D_1	D_2	D_3 h7	D_4	D_5	S_1 H13		E					
	mm														Nm		
FLRBU1	42	10	25	14	76	50	47	63	30	6,6	M6×25	27	KMT 1	HN 3	10	M5	4,5
FLRBU2	46	10	32	18	90	62	60	76	37	6,6	M6×25	32	KMT 3	HN 4	15	M6	8
FLRBU3	77	13	60	18	90	59	60	74	40	9	M8×25	32	KMT 4	HN 5	18	M6	8
FLRBU4	89	16	68	20	120	80	80	100	44	11	M10×30	44	KMT 5	HN 5	25	M6	8
FLRBU5	110	20	82	22	140	99	100	120	54	13	M12×40	54	KMT 7	HN 7	42	M6	8
FLRBU6	140	25	98,5	25	171	130	130	152	75	13	M12×40	67	KMT 10	HN 10	70	M8	18
FLRBU7	180	30	133,5	28	225	170	170	198	95	17,5	M16×55	87	KMT 13	HN 14	100	M8	18
FLRBU8	235	35	179	32	285	219	220	252	125	22	M20	115	KMT 18	HN 18	160	M10	35

Flanged bearing unit designations	**Bearing designations**	**Quantity of bearings**	**Basic load ratings**		**Max preload torque at 50 rpm***	**Axial rigidity**	**Tilt rigidity**
			C_a	C_{oa}			
			kN		Nm	N/µm	Nm/mrad
FLRBU1	7201 BEGBP	2	13,3	14,7	0,10	150	40
FLRBU2	7303 BEGBP	2	27,9	31,9	0,25	190	51
FLRBU3	7204 BEGBP	4	40,1	63,8	0,25	400	140
FLRBU4	7305 BEGBP	4	74,2	119,2	1,10	450	160
FLRBU5	7307 BEGBP	4	109,4	188,4	1,10	600	715
FLRBU6	7310 BEGBP	4	208,8	392,3	1,50	750	1 000
FLRBU7	7313 BEGBP	4	305,3	615,4	2,00	1 250	3 200
FLRBU8	7318 BEGBP	4	473,1	1123	2,30	1 500	7 500

* Preload torque measured at 50 rpm and using SKF LGEP2 lubricant

Symbols, see **page 191**

End machining for FLRBU

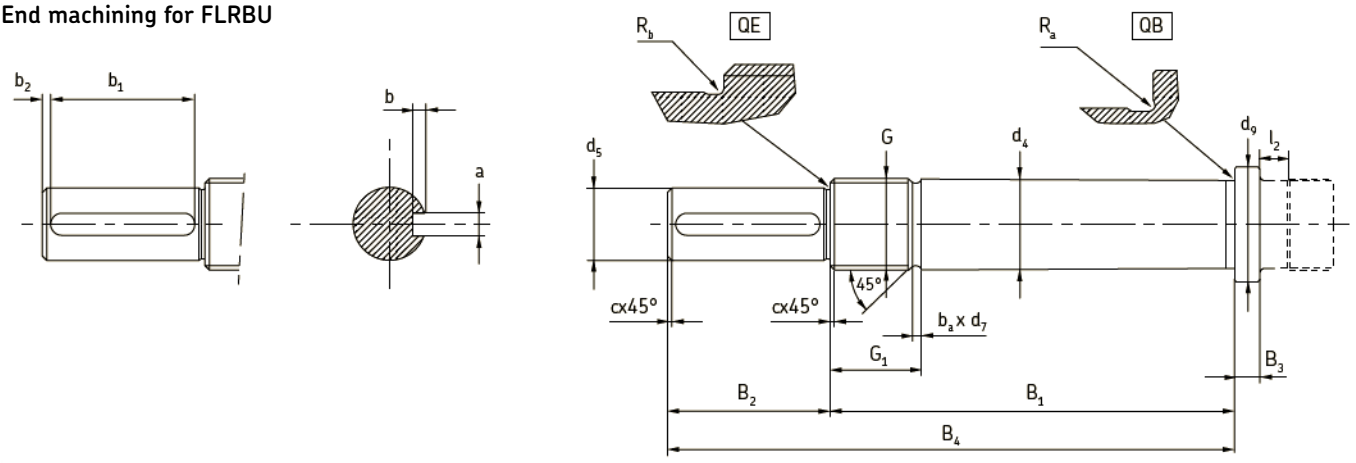

Designations	Dimensions																	
	d_4 h6	d_5 h7	d_9	B_1 js12	B_2	B_4 js12	B_3	G 6g	G_1	c	b_a	d_7 h11	R_a	R_b	a N9	b +0,100 0	b_1 +0,5 0	b_2
	mm																	
FLRBU1	12	10	17	58	20	78	5	M12×1	17	0,5	1,5	10,5	0,4	0,4	3	1,8	16	1,5
FLRBU2	17	15	23	66	30	96	5	M17×1	22	0,5	1,5	15,5	0,6	0,6	5	3,0	25	2,0
FLRBU3	20	17	27	97	40	137	7	M20×1	22	0,5	1,5	18,5	0,6	0,6	5	3,0	35	2,0
FLRBU4	25	20	34	112	45	157	7	M25×1,5	25	0,5	2,3	22,8	0,6	0,6	6	3,5	40	2,5
FLRBU5	35	30	45	134	55	189	10	M35×1,5	26	1	2,3	32,8	0,6	0,6	8	4,0	45	2,5
FLRBU6	50	40	62	168	65	233	12	M50×1,5	31	1	2,3	47,8	0,8	0,8	12	5,0	55	4,0
FLRBU7	65	60	78	210	100	310	18	M65×2	32	1	3,0	62,2	1,2	1,0	18	7,0	90	2,5
FLRBU8	90	85	108	270	120	390	25	M90×2	39	1	3,0	87,2	1,6	1,2	25	9,0	100	5,0

SR/BR/PR
Ph ≤ 8 mm, $l_2 \geq 12$ mm
Ph > 8 mm, $l_2 \geq 1,4$ Ph

SV/BV/PV
Valid for lead Ph = 1, for 40×2, 50×2, 63×2
$l_2 \geq 12$ mm
All others $l_2 \geq 14$ mm

Other possible bearing arrangement

In case of load acting mainly in one direction, we recommend the following thrust bearing units:

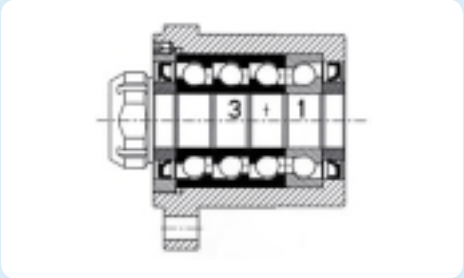

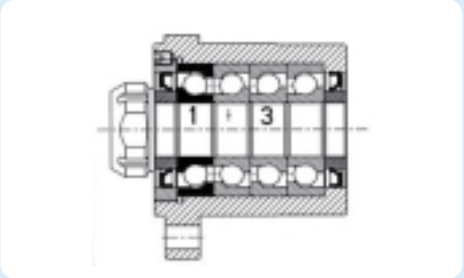

	C_a	C_{0a}	C_a	C_{0a}
	kN			
FLRBU1 (*): No other possible arrangement (1+1)		-	-	-
FLRBU2 (*): No other possible arrangement (1+1)		-	-	-
FLRBU3	53,3	95,7	24,7	31,9
FLRBU4	98,6	178,8	45,7	59,6
FLRBU5	145,3	282,6	67,3	94,2
FLRBU6	277,3	588,6	128,5	196,2
FLRBU7	405,5	923,1	187,9	307,7
FLRBU8	628,3	1684,6	291,2	561,5

3 Ball & roller screws
Roller screws

Thrust bearing units for the standard roller screw range

Flanged thrust bearing	Suitable for SRC, SRF, BRC & BRF			Suitable for PRU & PRK		
FLRBU1	SR 8×4			PR 8×4		
				PR 12×5		
				PR 15×5	PR 15×8	
FLRBU2	SR 12×5			PR 20×6		
	SR 15×5	SR 15×8		PR 21×5	PR 21×6	PR21×8
	SR 20×6			PR 24×6	PR 24×12	
FLRBU3	SR 24×6			PR 21×10		
				PR 25×5	PR 25×10	PR 25×15
FLRBU4	SR 21×5	SR 21×6	SR 21×8	PR 30×5	PR 30×6	PR 30×10
	SR 21×10			PR 30×20		
	SR 24×12			PR 36×6	PR 36×9	PR 36×12
	SR 25×5	SR 25×10	SR 25×15	PR 36×18	PR 36×24	
				PR 39×5		
				PR 44×8	PR 44×12	
FLRBU5	SR 30×5	SR 30×6	SR 30×10	PR 39×10	PR 39×15	PR 39×20
	SR 36×6	SR 36×9	SR 36×12	PR 39×25		
	SR 36×18			PR 44×18	PR 44×24	PR 44×30
				PR 48×5	PR 48×8	
				PR 56×12		
FLRBU6	SR 30×20			PR 48×10	PR 48×15	PR 48×20
	SR 36×24			PR 48×25		
	SR 39×5	SR 39×10	SR 39×15	PR 56×24	PR 56×36	
	SR 39×20	SR 39×25		PR 60×10	PR 60×15	PR 60×20
	SR 44×8	SR 44×12	SR 44×18	PR 64×12	PR 64×18	PR 64×24
	SR 44×24	SR 44×30		PR 64×30	PR 64×36	
	SR 48×5	SR 48×8	SR 48×10			
	SR 48×15					
	SR 56×12					
FLRBU7	SR 48×15	SR 48×20	SR 48×25			
	SR 56×24	SR 56×36				
	SR 64×12	SR 64×18	SR 64×24			
FLRBU8	SR 60×10	SR 60×15	SR 60×20			
	SR 75×10					
	SR 80×12	SR 80×18	SR 80×24			
	SR 80×36	SR 80×42				

Flanged thrust bearing	Suitable for SVC, BVC, SVF & BVF			Suitable for PVU & PVK		
FLRBU1	SV 8×1	SV 8×2		PV 8×1	PV 10×1	
	SV 10×1	SV 10×2		PV 12×1	PV 12×2	PV 16×1
	SV 12×1	SV 12×2		PV 16×2	PV 20×1	PV 20×2
	SV 16×1	SV 16×2				
FLRBU2	SV 20×1	SV 20×2		PV 25×1	PV 25×2	
FLRBU3	SV 25×1	SV 25×2		PV 32×1	PV 32×2	
				PV 40×2		
FLRBU4	SV 32×1	SV 32×2		PV 40×1		
	SV 40×2			PV 50×2	PV 50×4	
FLRBU5	SV 40×1			PV 50×1	PV 50×3	
	SV 50×2	SV 50×4		PV 63×2	PV 63×4	
FLRBU6	SV 50×1	SV 50×3		PV 80×4		
	SV 63×2	SV 63×4				
FLRBU7	SV 80×4			PV 100×5		
FLRBU8	SV 100×5					

Symbols, see **page 191**

Symbols

C_{req}	N	Required load rating
C_a	kN	The dynamic load rating (L10 life) is such that 90 % of a sufficiently large sample of identical screws can be expected to attain or exceed 1 million revolutions under this constant centrally acting pure axial load without fatigue (flaking).
C_{oa}	kN	The static load rating is that axial constant centrally acting load which produces a total permanent deformation of one raceway and roller of 0,0001 of the diameter of the curved surface of the roller.
F	N	Axial load
F_c	N	Compression load
F_m	N	Constant mean axial load
F_{pr}	N	The preload force between a nut half (or nut) and the shaft
F_q	N	The squeeze load applied to two nut halves (or nuts) by the housing or fixing bolts
Hv	-	Vickers hardness
I	kgm^2	Inertia
I_L	kgm^2	Inertia of load
I_M	kgm^2	Inertia of motor
I_{nn}	kgm^2	Inertia of nut when turning nut
I_{ns}	kgm^2	Inertia of rollers when turning shaft
I_s	$kgmm^2/m$	Inertia of screw shaft per metre
L	10^6 revs	Life
L_{10}	10^6 revs	Basic life rating, millions of revolutions
L_{10h}	hours	Basic life rating, operating hours
M	µm	Maximum difference between mean travels of screws in a matched set
N	-	Number of thread starts on the screw shaft
N_r	-	Standard number of rollers
N_{max}	-	Maximum number of rollers
P	W	Power
P_h	mm	Lead
R	N/µm	Rigidity
R_n	N/µm	Nut rigidity
R_{ng}	N/µm	Minimum guaranteed nut rigidity
R_{nr}	N/µm	Reference nut rigidity

including deflection of:
- the nut body
- rollers/nut contact
- rollers/screw shaft contact
- length of screw shaft in contact with rollers

R_s	N/µm	Screw shaft rigidity
R_t	N/µm	Total rigidity
T	Nm	Torque
T_B	Nm	Brake torque
T_{dt}	Nm	Total torque at constant speed
T_f	Nm	Torque from friction in support bearings, motor, seals, etc
T_{pe}	Nm	Torque for play elimination
T_{pr}	Nm	Preload torque
T_{st}	Nm	Starting torque
T_t	Nm	Total torque
U	mm	Stroke length
V	h^{-1}	Strokes per hour
W	h/day	Hours per day
X	days/year	Days per year
Y	years	Years
Z_s	cc	Grease quantity for screw shaft
Z_n	cc	Grease quantity for nut

life calculation

c	µm	Travel compensation - the difference between the specified travel and the nominal travel. Its value is always defined by the customer: if not specified it will be assumed to be zero. (The specified travel can also be defined by the specified lead multiplied by the number of revolutions)
d_o	mm	Nominal
d_1	mm	Outside
d_2	mm	Root
d_b	mm	Bore

diameter of screw shaft

e_p	µm	Tolerance of actual mean travel, l_m relative to specified travel l_s
f	-	Factors
g	m/s^2	Acceleration of gravity: 9,8
l	mm	Length
l_o	mm	Nominal travel - the nominal lead multiplied by the number of revolutions
l_1	mm	Threaded length
l_e	mm	Excess travel - at each end of the threaded length a distance le is subtracted to leave l_u the useful travel. The specified lead precision does not apply to the lengths l_e. $l_u = l_1 - 2\ l_e$
l_m	mm	Actual mean travel. The curve is the result of measurements at 20 °C of the screw shaft. l_m is the line which fits the curve by the method of least squares
l_s	mm	Specified travel
l_{tp}	mm	Maximum total length
l_u	mm	Useful travel - the length of thread which is subject to the specifi ed lead precision
m	kg	Mass
m_L	kg	Mass of the load
m_n	kg	Mass of the nut
m_s	kg/m	Mass of the screw shaft per metre
n	rpm	Rotational speed
n_{cr}	rpm	Critical speed
n_p	rpm	Maximum permissible speed
s_{ap}	mm	Maximum axial play
t	µm	Manufacturing tolerance
v	µm	Travel variation - the band width or the distance between the two straight lines parallel to the actual mean travel which enclose the curve
v_{300}	µm	The bandwidth over any 300 mm section of the useful travel. v_{300a} and v_{300p} are actual and permissible values
v_u	µm	The bandwidth over the useful travel. v_{ua} and v_{up} are actual and permissible values
δ	µm	Deflection
α	°	Helix angle of the screw shaft thread
λ	°	Friction angle
µ	–	Coefficient of friction

$\tan \lambda = \mu$

μ_{st}	–	Coefficient of friction when starting
μ_F	–	Coefficient of friction for bearing
σ	MPa	Nominal axial stress
σ_p	MPa	Real axial stress
σ_t	MPa	Total stress
τ	MPa	Nominal shear stress
τ_p	MPa	Real shear stress
η	–	Theoretical direct efficiency
η'	–	Theoretical indirect efficiency
η_p	–	Real direct effi ciency
η'_p	–	Real indirect effi ciency
θ	°	Angle of twist
$\dot{\omega}$	rad/s^2	Angular acceleration
Ω	mm × rpm	Speed quotient, $n_p \times d_o$

Applications

In response to our customer's ultimate need to produce more with less, SKF has combined its knowledge and experience with the latest technology to develop solutions for your specific conditions. Whether your goal is to design equipment that provides more customer value, or to increase overall profitability, with SKF experience and expertise, you're likely to find a real solution.

Plastic injection molding

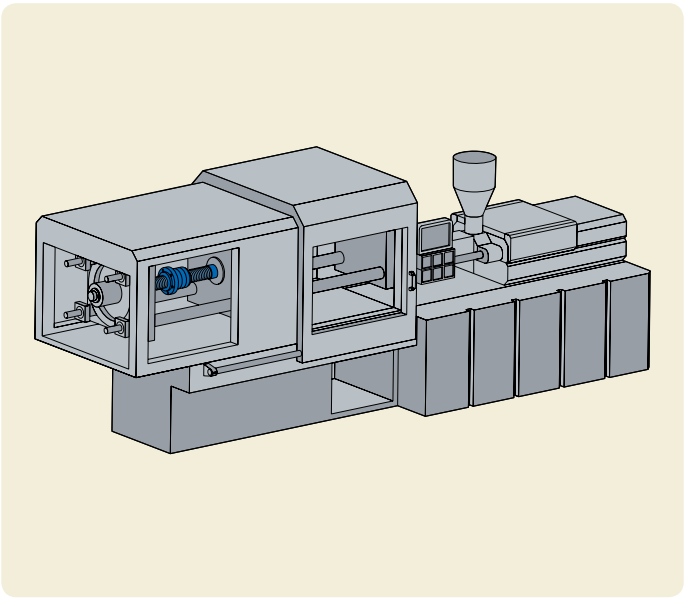

Components application
a) Planetary roller screws

Metals industry

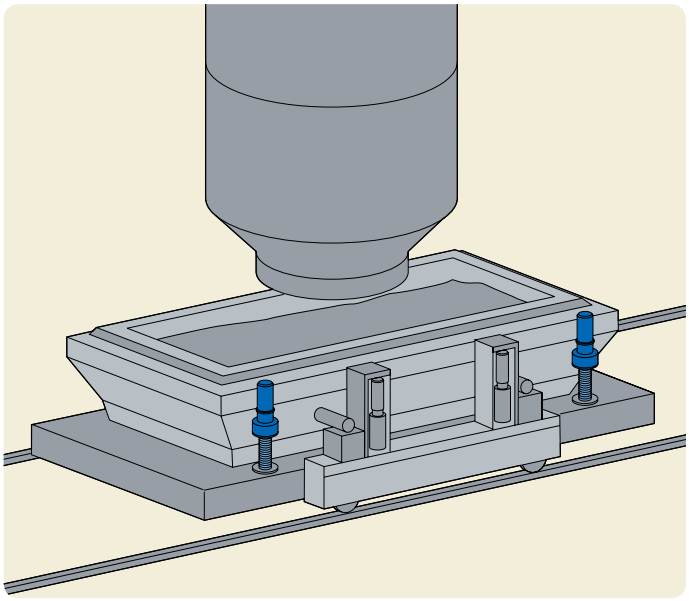

Components application
a) Planetary roller screws

Forming and stamping press

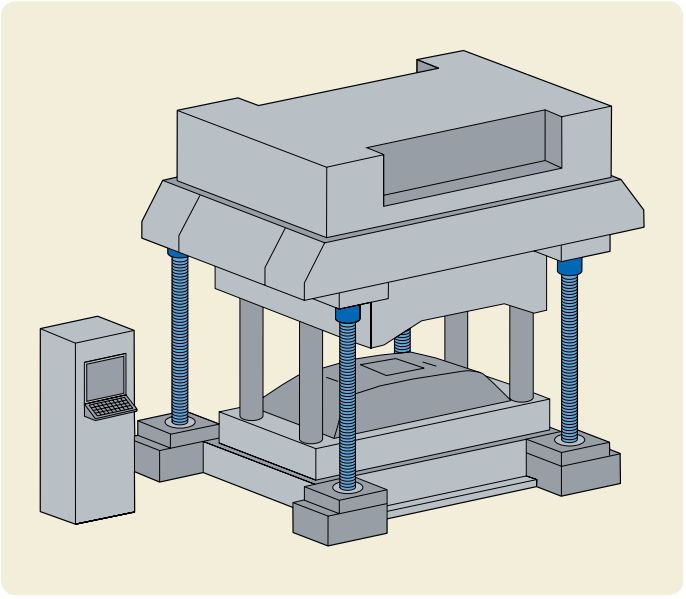

Components application
a) Recirculating roller scerws

Tilting train

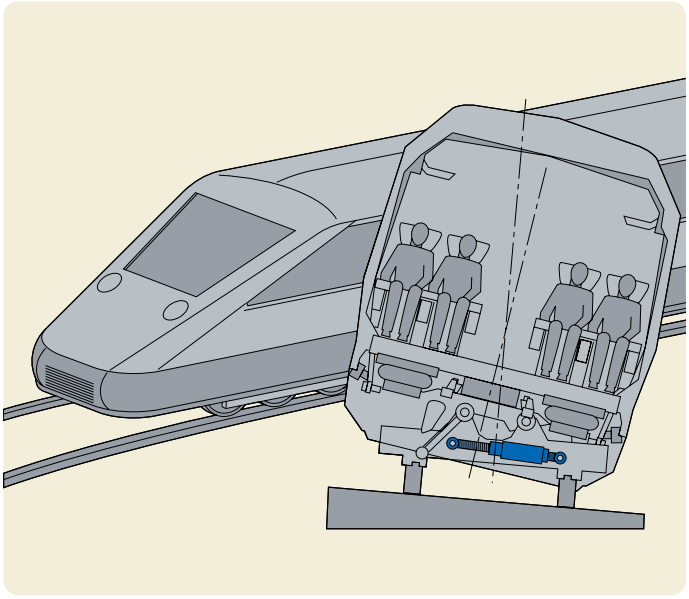

Components application
a) Planetary roller screws

Notes

The highest power lies beneath the smallest things

An ant can lift up to thirty times and transport up to fifty times its own weight.

It's the power of such small things that has inspired SKF to create solutions with reduced dimensions yet endowed with great potential for your applications.

Behind compactness and decreased weight lies high performance which will lead to greater precision and efficiency, while reducing cycle times to a minimum.

Miniature profile rail guides, miniature linear ball bearings, miniature ball screws, miniature slides – small units that can be placed almost anywhere, but always of the highest quality, is what you expect from SKF.

Tables: driven and not driven

General

Positioning systems are compact and economic complete solutions. The assortment ranges from compact slides without drives through to highly dynamic, multi-axis systems with linear motor drive. SKF offers the following positioning systems:
Miniature slides (**fig. 1**),
Standard slides (**fig. 2**),
Dovetail slides (**fig. 3**),
Compact cross tables (**fig. 4**),
Precision slides without drive (**fig. 5**),
Linear ball bearing slides (**fig. 6**),
Profile rail slides (**fig. 7**).

LZM miniature slides
With the new LZM miniature slide SKF offers the ideal solution for linear motion applications for short strokes and compact boundary dimensions. The use of miniature slides has increased in medical applications, measurement technologies, pneumatics, micro mechanics and micro electronics assembly, semiconductor manufacturing and fibre optics. The different miniature slide components meet the highest precision standards; LZM miniature slides feature high running accuracy and smooth motion. The LZM are manufactured with all stainless steel components. Optimised hardness enables long endurance life and high performance within compact boundary dimensions. The miniature slides have been designed to ensure high system stiffness and precision guidance. Running accuracies of 2 µm over a stroke of 100 mm are attainable depending on the particular application. Ease of installation is another advantage of the LZM miniature slides. Unlike cross roller systems using 4 rails and cages to be assembled on the production floor, the LZM slide provides a complete slide that can simply be bolted into place without the use of precision devices to set preload. Every application provides new challenges for the modern designer. SKF will modify existing designs to meet your specific technical requirements.

Advantages for LZM miniature slides:
- Compact design
- High carrying capacity

Fig. 1

- Very good running accuracy
- Smooth running
- High stiffness
- Easy assembly

For dimensions, see table on **page 201**.

Operating precision (**table 1**)
Comparison of the different positioning components and systems.

Table 1

Operating precision (µm)	Linear guides				Ball & roller screws			Tables: driven and not driven
0,1-1		Precision rail guides		Standard slides	Roller screws	Ball screws	Linear motors	Standard drives or linear motors with all guiding systems
1-10	Linear ball bearings		Profile rail guides					
10-100								
100-1 000								

5 Tables: driven and not driven
General

Fig. 2

GCL standard slides
Slide top and base of steel. The slides are provided with standard patterns of mounting holes. The slide top carries tapped holes, the base plate counterbored holes for cylindrical screws to DIN 912. The slides are fitted with SKF precision rail guides with crossed roller units. Internal stops serve as stroke limit.

For dimensions, see table on **page 204**.

GCLA standard slides
Slide top and base of black anodised aluminium. In other respects, the design corresponds to that of the GCL slides except that they are lower in height.

For dimensions, see table on **page 206**.

RM standard slides
Especially small design. Slide top of steel, guidance via SKF precision rails with double-sided centre rail and crossed roller units. Internal stops serve as stroke limits.

For dimensions, see table on **page 208**.

Fig. 3

SSM and SSK dovetail slides
Slide top and base of grey cast iron.
The slides are provided with standard patterns of mounting holes. Top and base plate both carry tapped holes. The slides have a lead screw drive. The SSM design has a micrometer knurl with vernier ring, while the SSK design is fitted with a hand crank. Both designs are fitted with a lateral locking device.

For dimensions, see table on **page 210**.

Fig. 4

T0 and TS compact cross tables
Table top, centre and base of black anodised aluminium with central viewing hole. The slides are fitted with SKF precision rail guides incorporating crossed roller units. The T0 design does not have a drive but is provided with one lateral locking device per axis. The TS design has a micrometer attachment that is springloaded in one direction. In addition, one lateral locking device is fitted per axis.

For dimensions, see table on **page 213**.

Fig. 5

RSM and RSK precision slides
Slide top and base of grey cast iron.
The slides are provided with standard patterns of mounting holes. The slide top carries tapped holes, the base plate counterbored holes for cylindrical screws to DIN 912. They are fitted with SKF precision rail guides incorporating crossed roller units. The slides have a lead screw drive.
The RSM design has a micrometer knurl with a vernier ring, while the RSK design is fitted with a hand crank.

For dimensions, see table on **page 214**.

Fig. 6

Fig. 7

Fig. 8

LZBB and LZAB linear ball bearing slides

The slides are fitted with SKF linear ball bearings of ISO series 3. They are driven via SKF rolled thread ball screws attached on both sides. The slides are protected by bellows. The LZBB design has a closed housing. Shafts are attached on both sides in shaft blocks which also incorporate the bolt holes for attaching the slide. The LZAB design has an open housing. Shafts are attached over the entire length by shaft supports to prevent shaft deflection with large strokes or high loads. The slide is attached via the bolt holes in the two shaft supports.

For principal dimensions, see table on **pages 217-218**.

LTB profile rail guide slides with ball screw drive

These slides are equipped with precision rolled thread ball screw drives.
Customer benefits:
- Robust drive
- Suitable for high axial forces
- Can be fitted with manual drive as well as servo motor or stepper motor
- Attachment via motor flange or indirect tooth belt drive..

For principal dimensions, see table on **pages 220-230**.

LTS profile rail guide slides with linear motor

These profile rail guide slides are equipped with brushless AC motors.
Customer benefits:
- High dynamics and stiffness in a closed loop system
- Good synchronous characteristics
- High acceleration capacity
- High speeds achievable
- Friction and wear-free drive.

For principal dimensions, see table on **pages 233-237**.

Complete systems

On special demand, SKF designs and manufactures complete systems, either from SKF standard components or special solutions, that are exactly tailored to the respective application.

The different specifications are given in **table 2**.

5 Tables: driven and not driven

General

Table 2

Type	Precision	Load-carrying capacity	Dynamic capabilities	Speed
Miniature slides				
Standard slides				
Dovetail slides				
Compact cross tables				
Precision slides without drive				
Precision slides with drive				
Linear ball bearing slides				
Profile rail slides				
Complete systems				

N.B.:
In addition to this catalogue, all product brochures are available on **www.skf.com** *as PDF files.*

Publication nr. 6831/1 EN

Publication nr. 4211 EN

Publication nr. 4753 EN

Notes

5 Tables: driven and not driven
Miniature slides

Miniature slides

LZM

Ordering key

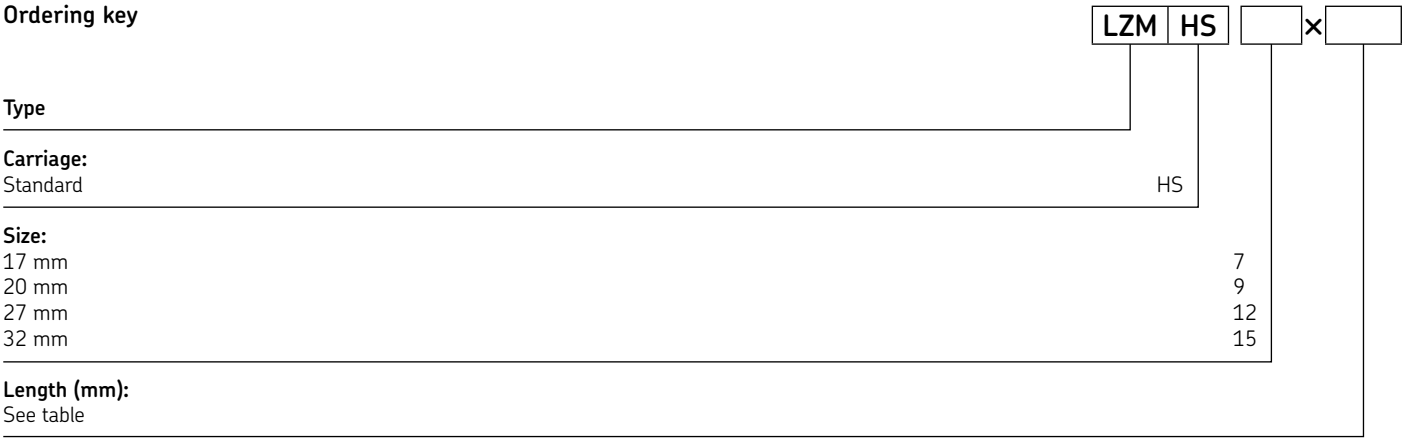

Example: LZM | HS | 15 × 165

LZM

Main dimensions for miniature slide units

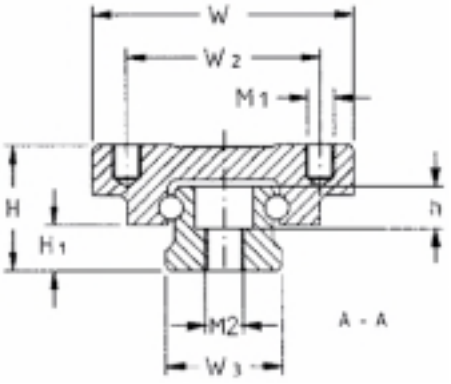

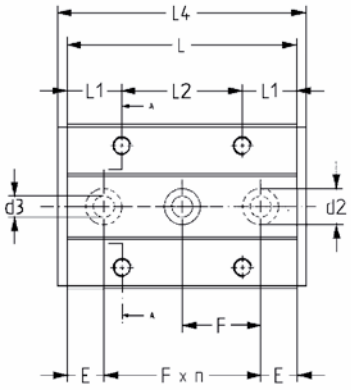

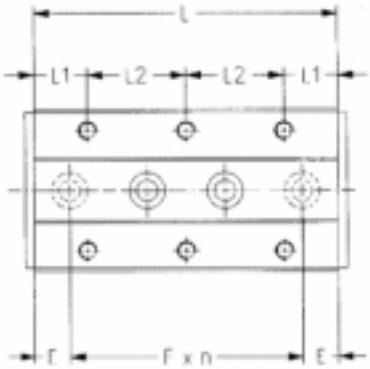

Designations	Dimensions									
	W	W_2	W_3	L_2	M_1×depth	d_3×d_2×h	H	H_1	M_2	F
	mm								–	mm
LZM HS 7	17	12	7	8	M2×2,5	2,5×4,5×2,5	8	2,35	M3	15
LZM HS 9	20	15	9	13	M3×3	3,5×6×3,5	10	3,55	M4	20
LZM HS 12	27	20	12	15	M3×3,5	3,5×6×4,5	13	4,7	M4	25
LZM HS 15	32	25	15	20	M3×4	3,5×6×4,5	16	6,0	M4	40

Designations	Dimensions				Max. stroke	Number of holes		Load-carrying capacities			
	L	L_4	E	L_1		Carriage	Rail	C	C_0	M_a /M_b	M_c
	mm					n		N		Nm	
LZM HS 7	26	29	5,5	5	24	6	2	1 000	1 700	3,5	6
	34	37	9,5	5	34	8	2	1 100	2 100	5,5	7
	50	53	10	5	50	12	3	1 500	3 100	12	10
	66	69	10,5	5	66	16	4	1 800	4 100	21	14
LZM HS 9	32	35	8	9,5	28	4	2	1 600	2 700	7	12
	42	45	11	8	40	6	2	1 900	3 400	11	15
	55	58	7,5	8	54	8	3	2 300	4 300	18	19
	81	84	10,5	8	78	12	4	3 000	6 500	43	29
	94	97	7	8	92	14	5	3 300	7 400	57	33
LZM HS 12	37	40	6	11	32	4	2	2 500	3 800	11	21
	51	54	13	10,5	47	6	2	3 100	5 300	22	28
	66	69	8	10,5	62	8	3	3 600	6 700	36	36
	96	99	10,5	10,5	95	12	4	4 700	9 700	76	52
	126	129	13	10,5	122	16	6	5 700	12 600	131	68
LZM HS 15	52	56	6	12,5	50	4	2	3 800	6 200	25	42
	85	89	22,5	12,5	80	8	2	5 400	10 400	73	70
	105	109	12,5	12,5	102	10	3	6 200	12 500	106	84
	165	169	22,5	12,5	162	16	4	8 400	19 500	264	131

No speed limit here

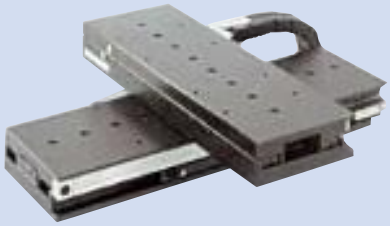

Can you believe that, if a human being could race at a speed proportional to that of a butterfly in full flight, he or she would reach 34 000 kilometres per hour?

It's only a hypothesis of course, but enough to inspire us to create tools able to surmount practically any limit including that of speed.

For example, the SKF linear motor slides, which are at their best where conventional slides have reached their limit, combine unbelievable speed with high precision.

Similarly, rotating ball nuts, thanks to the fixed screw, are capable of overcoming the critical speeds usually associated with ball screws, and can reach a speed rating of 90 000 Nd.

With SKF, maximum speed is an everyday norm.

Standard slides

GCL, GCLA, RM

Ordering key

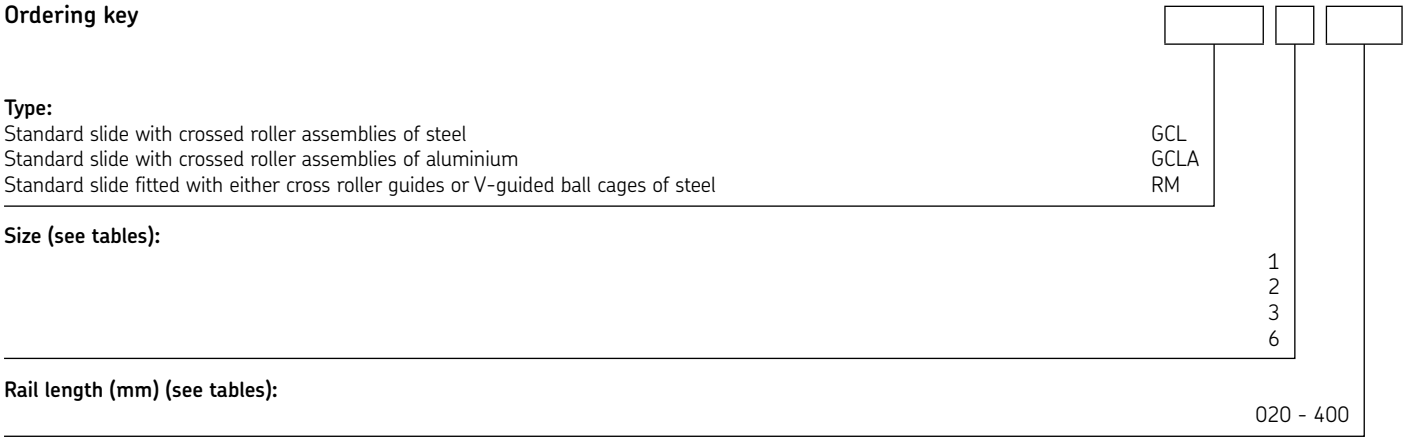

Example: GCLA 6 400

4

5 Tables: driven and not driven
Standard slides

GCL

Standard slides with crossed roller assemblies, steel version, for manual positioning.

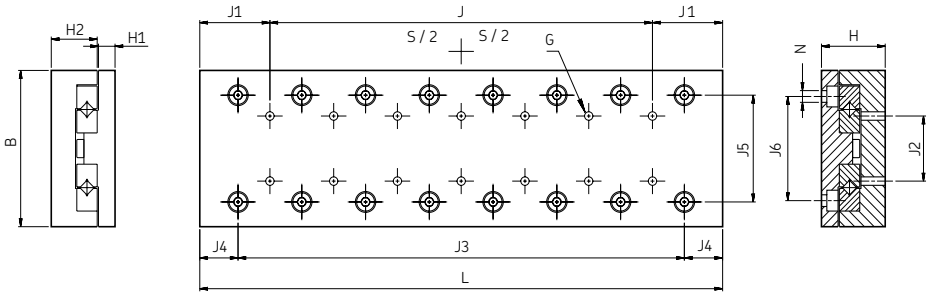

Designations	Dimensions			Stroke									
	B	H	L	S_1[1)]	S_2[1)]	G	H_1	H_2	J	J_1	J_2	J_3	J_4	J_5
	mm					–	mm							
GCL 2030	40	21	35	18	–	M3	6,5	14	–	17,5	15	1×15	10	25
GCL 2045	40	21	50	30	–	M3	6,5	14	1×15	17,5	15	2×15	10	25
GCL 2060	40	21	65	40	46	M3	6,5	14	2×15	17,5	15	3×15	10	25
GCL 2075	40	21	80	50	60	M3	6,5	14	3×15	17,5	15	4×15	10	25
GCL 2090	40	21	95	60	75	M3	6,5	14	4×15	17,5	15	5×15	10	25
GCL 2105	40	21	110	70	90	M3	6,5	14	5×15	17,5	15	6×15	10	25
GCL 2120	40	21	125	80	105	M3	6,5	14	6×15	17,5	15	7×15	10	25
GCL 3050	60	28	55	30	–	M4	9	18,5	–	27,5	25	1×25	15	39
GCL 3075	60	28	80	45	55	M4	9	18,5	1×25	27,5	25	2×25	15	39
GCL 3100	60	28	105	60	80	M4	9	18,5	2×25	27,5	25	3×25	15	39
GCL 3125	60	28	130	75	105	M4	9	18,5	3×25	27,5	25	4×25	15	39
GCL 3150	60	28	155	90	130	M4	9	18,5	4×25	27,5	25	5×25	15	39
GCL 3175	60	28	180	105	155	M4	9	18,5	5×25	27,5	25	6×25	15	39
GCL 3200	60	28	205	130	180	M4	9	18,5	6×25	27,5	25	7×25	15	39
GCL 6100	100	45	110	60	70	M6	13	31	–	55	50	1×50	30	64
GCL 6150	100	45	160	95	120	M6	13	31	1×50	55	50	2×50	30	64
GCL 6200	100	45	210	130	170	M6	13	31	2×50	55	50	3×50	30	64
GCL 6250	100	45	260	165	220	M6	13	31	3×50	55	50	4×50	30	64
GCL 6300	100	45	310	200	270	M6	13	31	4×50	55	50	5×50	30	64
GCL 6400	100	45	410	280	370	M6	13	31	6×50	55	50	7×50	30	64

[1)] S_1 Standard stroke order designation. e.g. GCL 2030
S_2 Extended stroke order designation. e.g. GCL 2030L

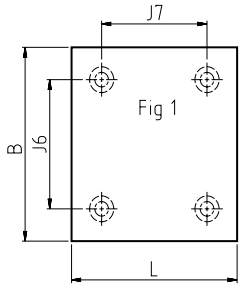

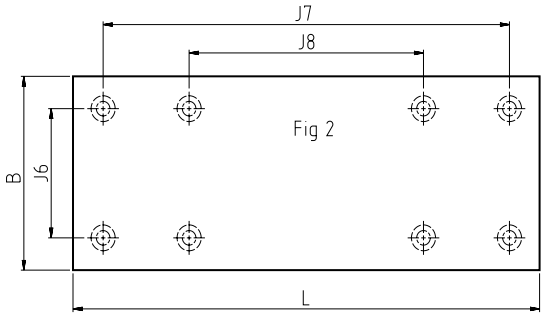

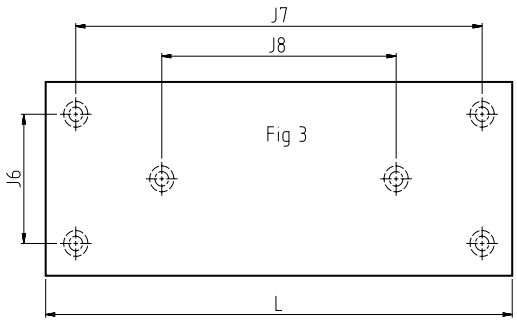

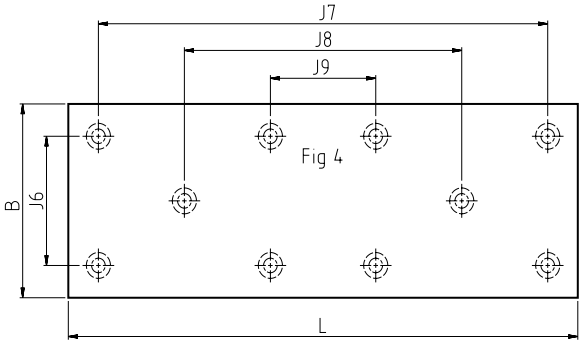

Designations	Dimensions						Load-carrying capacities with S_1	with S_2	Weight
	J_6	J_7	J_8	J_9	Fig.	N	C_0	C_0	G_5
	mm				n.		N		kg
GCL 2030	30	25	–	–	1	3,4	250	–	0,18
GCL 2045	30	40	–	–	1	3,4	360	–	0,26
GCL 2060	30	55	–	–	1	3,4	470	430	0,34
GCL 2075	30	70	40	–	2	3,4	580	540	0,42
GCL 2090	30	85	55	–	2	3,4	720	610	0,5
GCL 2105	30	100	70	–	2	3,4	830	720	0,58
GCL 2120	30	115	85	–	2	3,4	940	790	0,68
GCL 3050	40	35	–	–	1	4,5	480	–	0,57
GCL 3075	40	60	–	–	1	4,5	800	720	0,8
GCL 3100	40	85	–	–	1	4,5	1 040	880	1
GCL 3125	40	110	–	–	1	4,5	1 360	1 120	1,3
GCL 3150	40	135	85	–	3	4,5	1 600	1 280	1,5
GCL 3175	40	160	110	–	3	4,5	1 920	1 520	1,7
GCL 3200	40	185	135	85	4	4,5	2 080	1 680	2
GCL 6100	60	90	–	–	1	6,6	2 380	2 040	3,1
GCL 6150	60	140	–	–	1	6,6	3 740	3 060	4,5
GCL 6200	60	190	90	–	3	6,6	4 760	4 080	5,9
GCL 6250	60	240	140	–	3	6,6	6 120	5 100	7,2
GCL 6300	60	290	190	–	3	6,6	7 140	6 120	8,6
GCL 6400	60	390	290	190	4	6,6	7 820	6 120	11,4

5 Tables: driven and not driven
Standard slides

GCLA

Standard slides with slide top and base made of black anodised aluminium, for manual positioning.
In other respects the design is similar to that of the GCL slides except for the slightly reduced height.

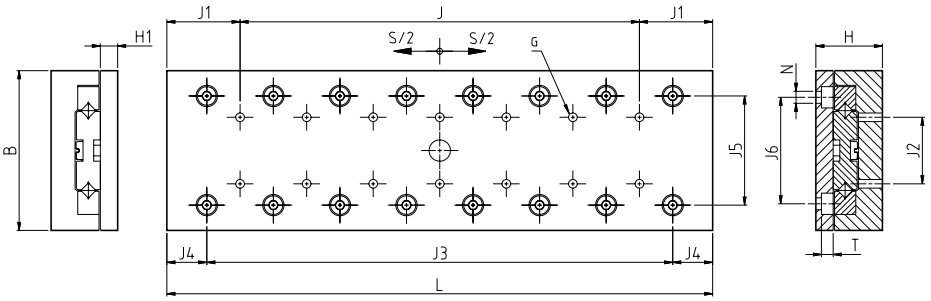

Designations	Dimensions			Stroke								
	B	H	L	S_1[1)]	S_2[1)]	G	H_1	J	J_1	J_2	J_3	J_4	J_5
	mm					–	mm						
GCLA 2030	40	21	35	15	–	M3	7	–	17,5	15	1×15	10	25
GCLA 2045	40	21	50	22	30	M3	7	1×15	17,5	15	2×15	10	25
GCLA 2060	40	21	65	30	45	M3	7	2×15	17,5	15	3×15	10	25
GCLA 2075	40	21	80	37	60	M3	7	3×15	17,5	15	4×15	10	25
GCLA 2090	40	21	95	45	75	M3	7	4×15	17,5	15	5×15	10	25
GCLA 2105	40	21	110	52	90	M3	7	5×15	17,5	15	6×15	10	25
GCLA 2120	40	21	125	60	105	M3	7	6×15	17,5	15	7×15	10	25
GCLA 3050	60	25	55	–	30	M4	8,25	–	27,5	25	1×25	15	41
GCLA 3075	60	25	80	37	55	M4	8,25	1×25	27,5	25	2×25	15	41
GCLA 3100	60	25	105	50	80	M4	8,25	2×25	27,5	25	3×25	15	41
GCLA 3125	60	25	130	62	105	M4	8,25	3×25	27,5	25	4×25	15	41
GCLA 3150	60	25	155	75	130	M4	8,25	4×25	27,5	25	5×25	15	41
GCLA 3175	60	25	180	87	155	M4	8,25	5×25	27,5	25	6×25	15	41
GCLA 3200	60	25	205	100	180	M4	8,25	6×25	27,5	25	7×25	15	41
GCLA 6100	100	40	110	50	70	M6	12	–	55	50	1×50	30	65
GCLA 6150	100	40	160	75	120	M6	12	1×50	55	50	2×50	30	65
GCLA 6200	100	40	210	100	170	M6	12	2×50	55	50	3×50	30	65
GCLA 6250	100	40	260	125	220	M6	12	3×50	55	50	4×50	30	65
GCLA 6300	100	40	310	150	270	M6	12	4×50	55	50	5×50	30	65
GCLA 6350	100	40	360	175	320	M6	12	5×50	55	50	6×50	30	65
GCLA 6400	100	40	410	200	370	M6	12	6×50	55	50	7×50	30	65

[1)] S_2 Extended stroke order designation. e.g. GCL 2030L

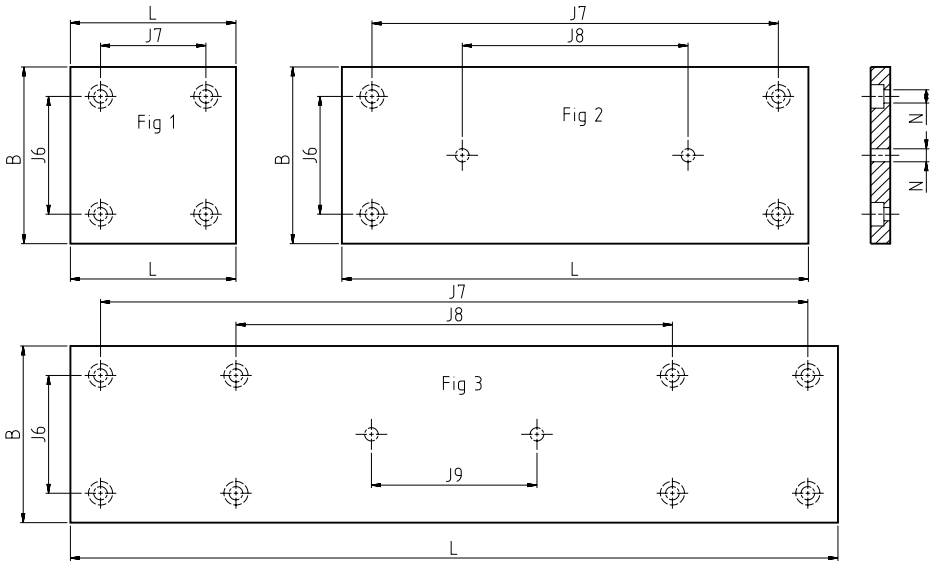

Designations	Dimensions						Load-carrying capacities with S_1	with S_2	Weight
	J_6	J_7	J_8	J_9	Fig.	N	C_0	C_0	G_5
	mm				n.		N		kg
GCLA 2030	30	25	–	–	1	3,8	430	–	0,1
GCLA 2045	30	40	–	–	1	3,8	688	602	0,14
GCLA 2060	30	55	–	–	1	3,8	946	774	0,19
GCLA 2075	30	70	–	–	1	3,8	1 204	946	0,23
GCLA 2090	30	85	45	–	2	3,8	1 376	1 113	0,28
GCLA 2105	30	100	50	–	2	3,8	1 634	1 290	0,32
GCLA 2120	30	115	30	–	2	3,8	1 892	1 376	0,37
GCLA 3050	40	35	–	–	1	4,8	–	952	0,29
GCLA 3075	40	60	–	–	1	4,8	1 496	1 224	0,43
GCLA 3100	40	85	–	–	1	4,8	2 040	1 632	0,57
GCLA 3125	40	110	–	–	1	4,8	2 448	1 904	0,7
GCLA 3150	40	135	75	–	2	4,8	2 992	2 312	0,84
GCLA 3175	40	160	86	–	2	4,8	3 536	2 584	0,97
GCLA 3200	40	185	55	–	2	4,8	4 080	2 992	1,1
GCLA 6100	60	90	–	–	1	6,8	4 320	3 780	1,6
GCLA 6150	60	140	–	–	1	6,8	6 480	5 400	2,4
GCLA 6200	60	190	100	–	2	6,8	8 640	6 480	3,1
GCLA 6250	60	240	80	–	2	6,8	10 800	8 100	3,9
GCLA 6300	60	290	150	–	2	6,8	13 500	9 720	4,7
GCLA 6350	60	340	200	80	3	6,8	15 660	11 340	5,4
GCLA 6400	60	390	230	90	3	6.8	17 820	12 420	6,2

5 Tables: driven and not driven
Standard slides

RM

Standard slides fitted with either cross roller rail guides or V-guided ball cages, for manual positioning; the opposing V-rails are screwed to a steel base plate. Slide top and bottom carry a standard pattern of mounting holes

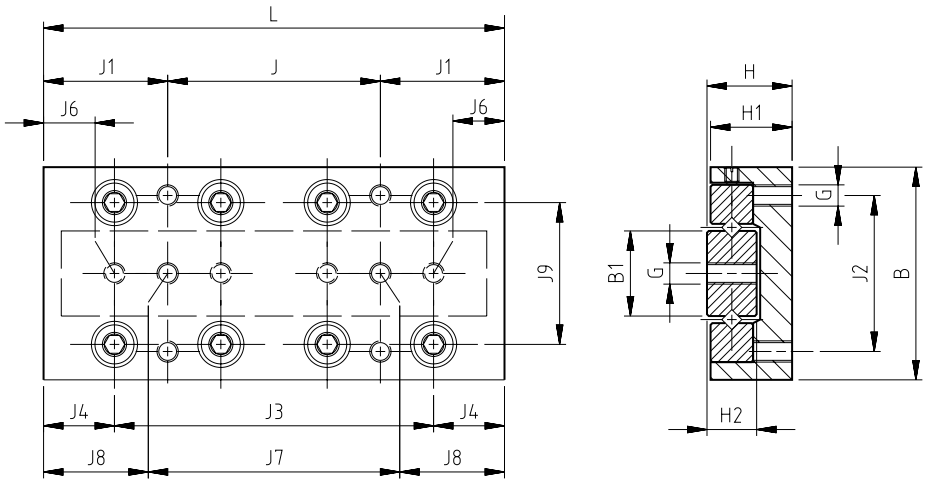

Designations	Dimensions			Stroke						
	B	H	L	S	B_1	G	H_1	H_2	J	J_1
	mm					–	mm			
RM 1020	20	8	25	12	7	M2,5	7,5	5	1×18	3,5
RM 1030	20	8	35	18	7	M2,5	7,5	5	1×28	3,5
RM 1040	20	8	45	25	7	M2,5	7,5	5	1×20	12,5
RM 1050	20	8	55	32	7	M2,5	7,5	5	1×30	12,5
RM 2060	30	12	65	40	12	M3	11,5	7	1×30	17,5
RM 2075	30	12	80	50	12	M3	11,5	7	1×45	17,5
RM 2090	30	12	95	60	12	M3	11,5	7	2×30	17,5
RM 3100	40	16	105	60	16	M4	15,5	9	1×50	27,5
RM 3125	40	16	130	75	16	M4	15,5	9	1×75	27,5
RM 3150	40	16	155	90	16	M4	15,5	9	2×50	27,5

Continued

Designations	Dimensions								Load-carrying capacities	Weight
	J_2	J_3	J_4	J_5	J_6	J_7	J_8	J_9	C_0	G_5
	mm								N	kg
RM 1020	14	1×10	7,5	2×7,5	5	1×18	3,5	12,6	208	0,025
RM 1030	14	2×10	7,5	2×10	7,5	1×20	7,5	12,6	364	0,025
RM 1040	14	3×10	7,5	3×10	7,5	1×28	8,5	12,6	464	0,025
RM 1050	14	4×10	7,5	4×10	7,5	1×30	12,5	12,6	572	0,025
RM 2060	22	3×15	10,0	3×15	10	–	–	20,0	860	0,16
RM 2075	22	4×15	10,0	4×15	10	–	–	20,0	1032	0,19
RM 2090	22	5×15	10,0	5×15	10	–	–	20,0	1290	0,23
RM 3100	30	3×25	15,0	3×25	15	–	–	28,5	1904	0,46
RM 3125	30	4×25	15,0	4×25	15	–	–	28,5	2312	0,58
RM 3150	30	5×25	15,0	5×25	15	–	–	28,5	2856	0,69

Slides, tables and compact cross tables

SSM / SSK, TO / TS, RSM / RSK

Ordering key

				-		-		-	

Type:

Precision slides with rail guide system, crossed rollers	R
Dovetail slides	S
Compact cross tables with rail guide system, crossed rollers	T

Versions:

Only valid for dovetail tables:	
For manual operation, with micrometer knurl	SM
For manual operation, with hand crank	SK
Only valid for precision tables:	
For manual operation, with micrometer knurl	SM
For manual operation, with hand crank	SK
Only valid for compact cross tables:	
For manual operation, without drive	0
For manual operation, with micrometer knurl	S

Table width B (mm) (see tables):

50 - 300

Length L_1 or dimension Sx Sy (mm):

L_1 for dovetail and precision slides	80 - 1010
Sx Sy for compact cross tables	025, 050, 100

Nominal stroke S (mm) (not for compact cross tables):

See tables

Designation suffix if desired:

Slides or tables made of aluminium, black anodised	A
Slides with thick top: only for precision slides	D
Slides with thick top and T-slots: dovetail and precision slides	DT
Locking device for dovetail slides (standard)	AR1
Locking device for precision slides and tables	AR2
Locking device for compact cross tables (standard)	AR3

Example 1:	R	SK	75	-	080	-	025		
Example 2:	S	SM	300	-	1010	-	500	-	AR1
Example 3:	S	SK	50	-	080	-	025	-	AR1
Example 4:	T	0	085	-	050	-		-	AR3

4

5 Tables: driven and not driven
Dovetail slides

Dovetail slides

SSM / SSK

SSM - with micrometer ring with spring preloading, allowing easy turning. One division equals 0,02 mm.

SSK - as SSM, but instead of knurled screw equipped with crank handle.

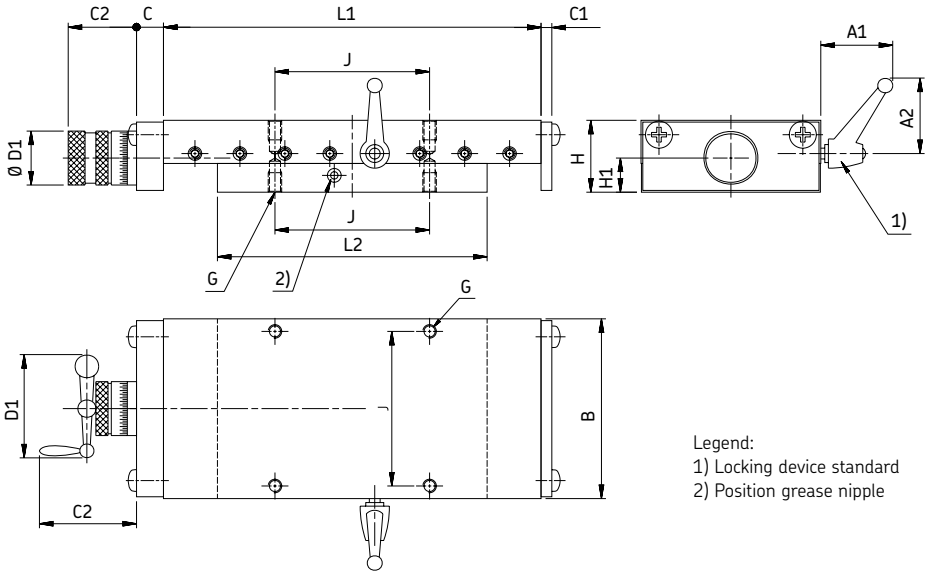

Legend:
1) Locking device standard
2) Position grease nipple

Designations	Dimensions				Stroke								Screw			Weight
	B	H	L_1	L_2	S	A_1	A_2	C	C_1	C_2	D_1	H_1	∅	J	G	GG
	mm														–	kg
SSM–50.080.025	50	25	80	50	25	37	42	19	6	31	23,5	12,3	M6×1	37	M4	0,7
SSK–50.080.025	50	25	80	25	25	37	42	19	6	51	47	12,3	M6×1	37	M4	0,7
SSM–50.130.025	50	25	130	25	25	37	42	19	6	31	23,5	12,3	M6×1	37	M4	1,2
SSK–50.130.025	50	25	130	25	25	37	42	19	6	51	47	12,3	M6×1	37	M4	1,2
SSM–50.130.050	50	25	130	50	50	37	42	19	6	31	23,5	12,3	M6×1	37	M4	1
SSK–50.130.050	50	25	130	50	50	37	42	19	6	51	47	12,3	M6×1	37	M4	1
SSM–50.155.050	50	25	155	50	50	37	42	19	6	31	23,5	12,3	M6×1	37	M4	1,3
SSK–50.155.050	50	25	155	50	50	37	42	19	6	51	47	12,3	M6×1	37	M4	1,3
SSM–50.155.075	50	25	155	75	75	37	42	19	6	31	23,5	12,3	M6×1	37	M4	1,2
SSK–50.155.075	50	25	155	75	75	37	42	19	6	51	47	12,3	M6×1	37	M4	1,2
SSM–50.180.075	50	25	180	75	75	37	42	19	6	31	23,5	12,3	M6×1	37	M4	1,4
SSK–50.180.075	50	25	180	75	75	37	42	19	6	51	47	12,3	M6×1	37	M4	1,4
SSM–50.205.100	50	25	205	100	100	37	42	19	6	31	23,5	12,3	M6×1	37	M4	1,7
SSK–50.205.100	50	25	205	100	100	37	42	19	6	51	47	12,3	M6×1	37	M4	1,7
SSM–75.105.025	75	32	105	75	25	38	42	21	6	38	30	15	M10×1	62	M5	1,9
SSK–75.105.025	75	32	105	75	25	38	42	21	6	54	47	15	M10×1	62	M5	1,9
SSM–75.155.050	75	32	155	100	50	38	42	21	6	38	30	15	M10×1	62	M5	2,6
SSK–75.155.050	75	32	155	100	50	38	42	21	6	54	47	15	M10×1	62	M5	2,6
SSM–75.205.050	75	32	205	150	50	38	42	21	6	38	30	15	M10×1	62	M5	3,4
SSK–75.205.050	75	32	205	150	50	38	42	21	6	54	47	15	M10×1	62	M5	3,4
SSM–75.155.075	75	32	155	75	75	38	42	21	6	38	30	15	M10×1	62	M5	2,3
SSK–75.155.075	75	32	155	75	75	38	42	21	6	54	47	15	M10×1	62	M5	2,3
SSM–75.180.075	75	32	180	100	75	38	42	21	6	38	30	15	M10×1	62	M5	2,8
SSK–75.180.075	75	32	180	100	75	38	42	21	6	54	47	15	M10×1	62	M5	2,8
SSM–75.205.100	75	32	205	100	100	38	42	21	6	38	30	15	M10×1	62	M5	3
SSK–75.205.100	75	32	205	100	100	38	42	21	6	54	47	15	M10×1	62	M5	3
SSM–75.255.100	75	32	255	150	100	38	42	21	6	38	30	15	M10×1	62	M5	3,8
SSK–75.255.100	75	32	255	150	100	38	42	21	6	54	47	15	M10×1	62	M5	3,8
SSM–75.305.150	75	32	305	150	150	38	42	21	6	38	30	15	M10×1	62	M5	4,2
SSK–75.305.150	75	32	305	150	150	38	42	21	6	54	47	15	M10×1	62	M5	4,2

Continued

SSM / SSK

(Continued)

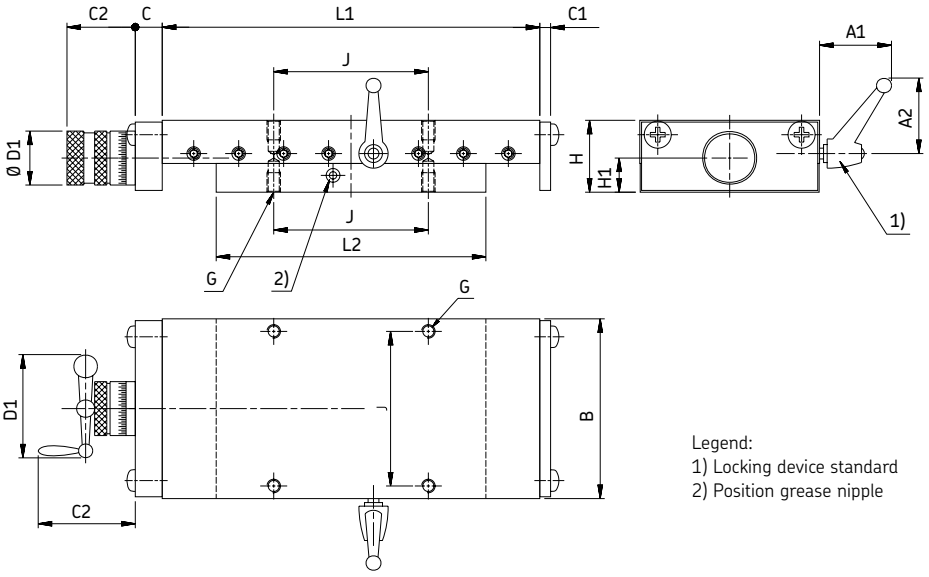

Legend:
1) Locking device standard
2) Position grease nipple

4

Designations	Dimensions				Stroke								Screw			Weight
	B	H	L_1	L_2	S	A_1	A_2	C	C_1	C_2	D_1	H_1	∅	J	G	GG
	mm														–	kg
SSM–100.160.050	100	40	160	100	50	40	45	21	6	38	30	19	M10×1	74	M6	4,4
SSK–100.160.050	100	40	160	100	50	40	45	21	6	54	47	19	M10×1	74	M6	4,4
SSM–100.260.050	100	40	260	200	50	40	45	21	6	38	30	19	M10×1	74	M6	7,2
SSK–100.260.050	100	40	260	200	50	40	45	21	6	54	47	19	M10×1	74	M6	7,2
SSM–100.210.100	100	40	210	100	100	40	45	21	6	38	30	19	M10×1	74	M6	5,1
SSK–100.210.100	100	40	210	100	100	40	45	21	6	54	47	19	M10×1	74	M6	5,1
SSM–100.310.100	100	40	310	200	100	40	45	21	6	38	30	19	M10×1	74	M6	7,9
SSK–100.310.100	100	40	310	200	100	40	45	21	6	54	47	19	M10×1	74	M6	7,9
SSM–100.310.150	100	40	310	150	150	40	45	21	6	38	30	19	M10×1	74	M6	7,1
SSK–100.310.150	100	40	310	150	150	40	45	21	6	54	47	19	M10×1	74	M6	7,1
SSM–100.410.150	100	40	410	250	150	40	45	21	6	38	30	19	M10×1	74	M6	10
SSK–100.410.150	100	40	410	250	150	40	45	21	6	54	47	19	M10×1	74	M6	10
SSM–100.410.200	100	40	410	200	200	40	45	21	6	38	30	19	M10×1	74	M6	9,2
SSK–100.410.200	100	40	410	200	200	40	45	21	6	54	47	19	M10×1	74	M6	9,2
SSM–100.510.200	100	40	510	300	200	40	45	21	6	38	30	19	M10×1	74	M6	12,1
SSK–100.510.200	100	40	510	300	200	40	45	21	6	54	47	19	M10×1	74	M6	12,1
SSM–150.310.100	150	50	310	200	100	45	62	28	8	53	47	24	Tr16×2	130	M8	15,4
SSK–150.310.100	150	50	310	200	100	45	62	28	8	92	103	24	Tr16×2	130	M8	15,4
SSM–150.510.100	150	50	510	400	100	45	62	28	8	53	47	24	Tr16×2	130	M8	26
SSK–150.510.100	150	50	510	400	100	45	62	28	8	92	103	24	Tr16×2	130	M8	26
SSM–150.410.200	150	50	410	200	200	45	62	28	8	53	47	24	Tr16×2	130	M8	17,8
SSK–150.410.200	150	50	410	200	200	45	62	28	8	92	103	24	Tr16×2	130	M8	17,8
SSM–150.610.200	150	50	610	400	200	45	62	28	8	53	47	24	Tr16×2	130	M8	28,5
SSK–150.610.200	150	50	610	400	200	45	62	28	8	92	103	24	Tr16×2	130	M8	28,5
SSM–150.510.300	150	50	510	200	300	45	62	28	8	53	47	24	Tr16×2	130	M8	20,2
SSK–150.510.300	150	50	510	200	300	45	62	28	8	92	103	24	Tr16×2	130	M8	20,2
SSM–150.710.300	150	50	710	400	300	45	62	28	8	53	47	24	Tr16×2	130	M8	30,9
SSK–150.710.300	150	50	710	400	300	45	62	28	8	92	103	24	Tr16×2	130	M8	30,9
SSM–150.710.400	150	50	710	300	400	45	62	28	8	53	47	24	Tr16×2	130	M8	28
SSK–150.710.400	150	50	710	300	400	45	62	28	8	92	103	24	Tr16×2	130	M8	28
SSM–150.810.400	150	50	810	400	400	45	62	28	8	53	47	24	Tr16×2	130	M8	33,3
SSK–150.810.400	150	50	810	400	400	45	62	28	8	92	103	24	Tr16×2	130	M8	33,3

Continued

5 Tables: driven and not driven
Dovetail slides

SSM / SSK

(Continued)

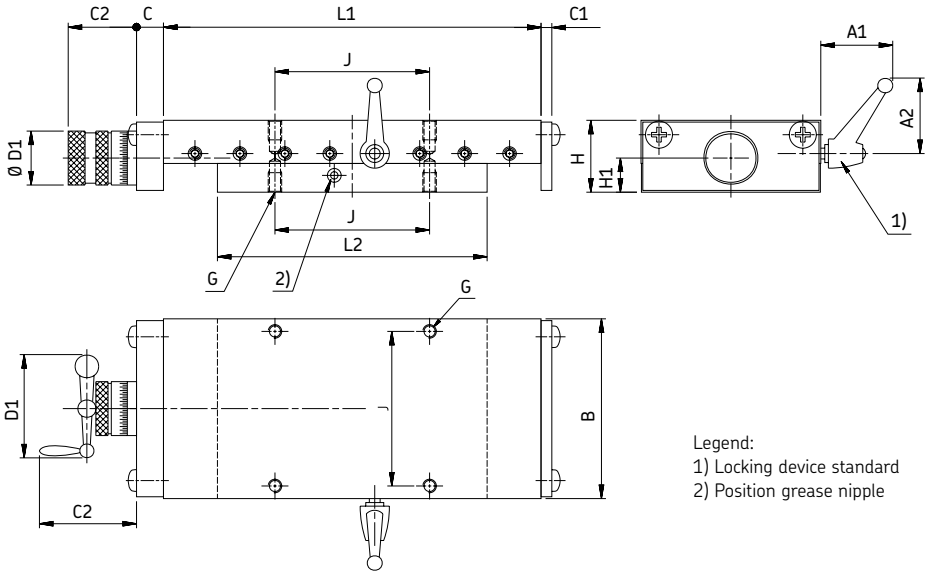

Legend:
1) Locking device standard
2) Position grease nipple

Designations	Dimensions				Stroke								Screw			Weight
	B	H	L_1	L_2	S	A_1	A_2	C	C_1	C_2	D_1	H_1	∅	J	G	GG
	mm														–	kg
SSM–200.310.100	200	60	310	200	100	45	62	28	8	53	47	25	Tr16×2	170	M8	24,7
SSK–200.310.100	200	60	310	200	100	45	62	28	8	92	103	25	Tr16×2	170	M8	24,7
SSM–200.410.100	200	60	410	300	100	45	62	28	8	53	47	25	Tr16×2	170	M8	33,2
SSK–200.410.100	200	60	410	300	100	45	62	28	8	92	103	25	Tr16×2	170	M8	33,2
SSM–200.510.200	200	60	510	300	200	45	62	28	8	53	47	25	Tr16×2	170	M8	37,2
SSK–200.510.200	200	60	510	300	200	45	62	28	8	92	103	25	Tr16×2	170	M8	37,2
SSM–200.610.200	200	60	610	400	200	45	62	28	8	53	47	25	Tr16×2	170	M8	45,7
SSK–200.610.200	200	60	610	400	200	45	62	28	8	92	103	25	Tr16×2	170	M8	45,7
SSM–200.610.300	200	60	610	300	300	45	62	28	8	53	47	25	Tr16×2	170	M8	41,1
SSK–200.610.300	200	60	610	300	300	45	62	28	8	92	103	25	Tr16×2	170	M8	41,1
SSM–200.710.300	200	60	710	400	300	45	62	28	8	53	47	25	Tr16×2	170	M8	49,6
SSK–200.710.300	200	60	710	400	300	45	62	28	8	92	103	25	Tr16×2	170	M8	49,6
SSM–200.710.400	200	60	710	300	400	45	62	28	8	53	47	25	Tr16×2	170	M8	45
SSK–200.710.400	200	60	710	300	400	45	62	28	8	92	103	25	Tr16×2	170	M8	45
SSM–200.810.400	200	60	810	400	400	45	62	28	8	53	47	25	Tr16×2	170	M8	53,5
SSK–200.810.400	200	60	810	400	400	45	62	28	8	92	103	25	Tr16×2	170	M8	53,5
SSM–300.410.100	300	75	410	300	100	55	74	20	10	80	66	34,5	Tr20×4	260	M10	64,6
SSK–300.410.100	300	75	410	300	100	55	74	20	10	146	125	34,5	Tr20×4	260	M10	64,6
SSM–300.510.100	300	75	510	400	100	55	74	20	10	80	66	34,5	Tr20×4	260	M10	80,7
SSK–300.510.100	300	75	510	400	100	55	74	20	10	146	125	34,5	Tr20×4	260	M10	80,7
SSM–300.510.200	300	75	510	300	200	55	74	20	10	80	66	34.5	Tr20×4	260	M10	72.4
SSK–300.510.200	300	75	510	300	200	55	74	20	10	146	125	34,5	Tr20×4	260	M10	72,4
SSM–300.610.200	300	75	610	400	200	55	74	20	10	80	66	34,5	Tr20×4	260	M10	88,6
SSK–300.610.200	300	75	610	400	200	55	74	20	10	146	125	34,5	Tr20×4	260	M10	88,6
SSM–300.710.300	300	75	710	400	300	55	74	20	10	80	66	34,5	Tr20×4	260	M10	96,4
SSK–300.710.300	300	75	710	400	300	55	74	20	10	146	125	34,5	Tr20×4	260	M10	96,4
SSM–300.810.400	300	75	810	400	400	55	74	20	10	80	66	34,5	Tr20×4	260	M10	104,3
SSK–300.810.400	300	75	810	400	400	55	74	20	10	146	125	34,5	Tr20×4	260	M10	104,3
SSM–300.1010.500	300	75	1 010	500	500	55	74	20	10	80	66	34,5	Tr20×4	260	M10	128,3
SSK–300.1010.500	300	75	1 010	500	500	55	74	20	10	146	125	34,5	Tr20×4	260	M10	128,3

Compact cross tables

TO / TS

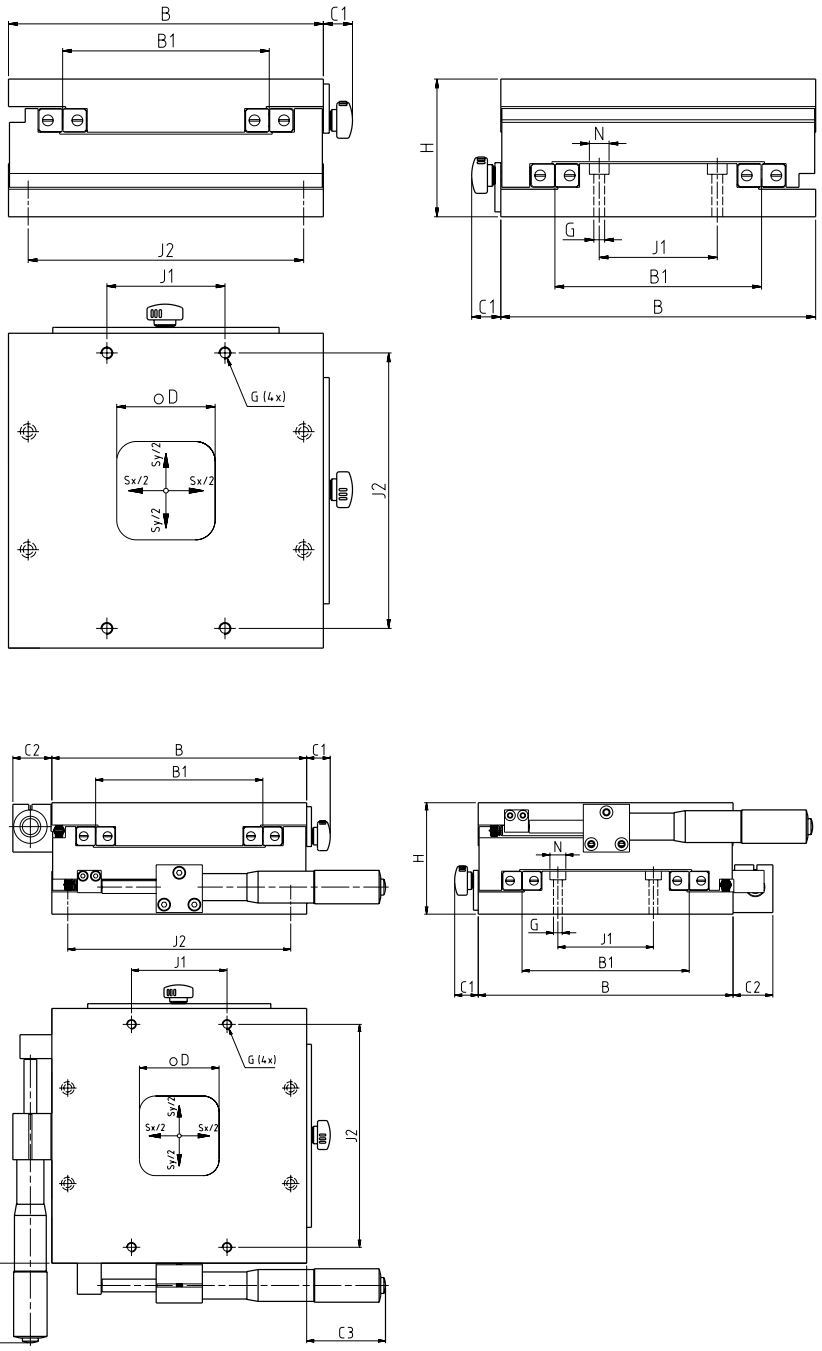

Designations	Dimensions			Stroke									Load-carrying capacities	Weight
	B	H	Sx Sy	B_1	C_1	C_2	C_3	D	N	G	J_1	J_2	C_0	GA
	mm									–	mm		N	kg
TO 085	85	40	50	48	16	–	–	22	∅ 4,2 / ∅ 8×4,5 (4×)	M5	20	70	3 400	0,8
TS 085	85	40	25	48	16	22,5	33	22	–	M5	20	70	4 200	1,1
TO 160	160	70	100	105	15	–	–	50	∅ 5 / ∅ 10×5,5 (4×)	M6	60	140	12 400	4
TS 160	160	70	50	105	15	25	50	50	–	M6	60	140	15 600	4,8

5 Tables: driven and not driven
Precision slides

Precision slides

RSM / RSK

Precision tables for manual operation with micrometer knurl RSM, with hand crank RSK

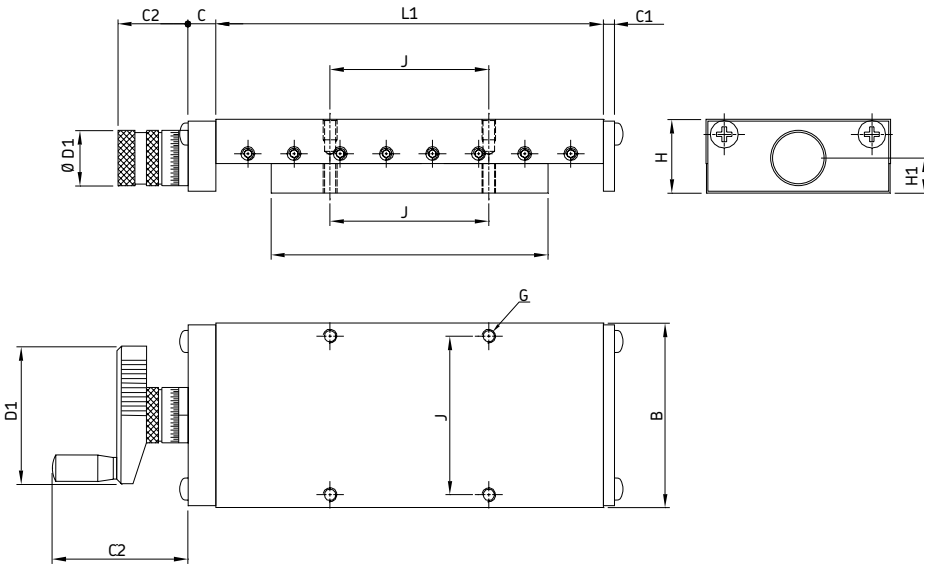

Designations	Dimensions				Stroke						Screw				Load-carrying capacities	Weight
	B	H	L_1	L_2	S	C	C_1	C_2	D_1	H_1	∅	J	G	N	C_0	GG
	mm												–	mm	kg	kg
RSM50.080.025	50	25	80	55	25	14	5	37,5	23	12,3	M6×1	37	M4	4,5	1,7	0,7
RSM50.130.025	50	25	130	105	25	14	5	37,5	23	12,3	M6×1	37	M4	4,5	3,3	1,1
RSM50.130.050	50	25	130	80	50	14	5	37,5	23	12,3	M6×1	37	M4	4,5	2,5	1
RSM50.130.075	50	25	130	55	75	14	5	37,5	23	12,3	M6×1	37	M4	4,5	1,7	0,9
RSM50.180.075	50	25	180	105	75	14	5	37,5	23	12,3	M6×1	37	M4	4,5	3,3	1,3
RSM50.180.100	50	25	180	80	100	14	5	37,5	23	12,3	M6×1	37	M4	4,5	2,5	1,2
RSM75.130.025	75	32	130	105	25	15	6	46	30	15	M10×1	62	M4	4,5	3,4	2,2
RSK75.130.025	75	32	130	105	25	15	6	88	71	15	M10×1	62	M4	4,5	3,4	2,2
RSM75.180.050	75	32	180	130	50	15	6	46	30	15	M10×1	62	M4	4,5	5,1	3
RSK75.180.050	75	32	180	130	50	15	6	88	71	15	M10×1	62	M4	4,5	5,1	3
RSM75.180.025	75	32	180	150	50	15	6	46	30	15	M10×1	62	M4	4,5	4,25	2,8
RSK75.180.025	75	32	180	150	50	15	6	88	71	15	M10×1	62	M4	4,5	4,25	2,8
RSM75.180.075	75	32	180	105	75	15	6	46	30	15	M10×1	62	M4	4,5	3,4	2,6
RSK75.180.075	75	32	180	105	75	15	6	88	71	15	M10×1	62	M4	4,5	3,4	2,6
RSM75.230.075	75	32	230	155	75	15	6	46	30	15	M10×1	62	M4	4,5	5,1	3,4
RSK75.230.075	75	32	230	155	75	15	6	88	71	15	M10×1	62	M4	4,5	5,1	3,4
RSM75.230.075	75	32	230	130	100	15	6	46	30	15	M10×1	62	M4	4,5	4,25	3,3
RSK75.230.075	75	32	230	130	100	15	6	88	71	15	M10×1	62	M4	4,5	4,25	3,3
RSM75.230.075	75	32	230	105	125	15	6	46	30	15	M10×1	62	M4	4,5	3,4	3,1
RSK75.230.075	75	32	230	105	125	15	6	88	71	15	M10×1	62	M4	4,5	3,4	3,1

Continued

RSM / RSK

(Continued)

Designations	Dimensions				Stroke						Screw				Load-carrying capacities	Weight
	B	H	L_1	L_2	S	C	C_1	C_2	D_1	H_1	∅	J	G	N	C_0	GG
	mm												–	mm	kg	kg
RSM100.260.050	100	40	260	210	50	15	6	46	30	15,5	M10×1	74	M6	6,6	8,8	6,8
RSK100.260.050	100	40	260	210	50	15	6	88	71	15,5	M10×1	74	M6	6,6	8,8	6,8
RSM100.310.050	100	40	310	260	50	15	6	46	30	15,5	M10×1	74	M6	6,6	10,9	8,2
RSK100.310.050	100	40	310	260	50	15	6	88	71	15,5	M10×1	74	M6	6,6	10,9	8,2
RSM100.360.050	100	40	360	310	50	15	6	46	30	15,5	M10×1	74	M6	6,6	13	9,6
RSK100.360.050	100	40	360	310	50	15	6	88	71	15,5	M10×1	74	M6	6,6	13	9,6
RSM100.310.100	100	40	310	210	100	15	6	46	30	15,5	M10×1	74	M6	6,6	8,8	7,5
RSK100.310.100	100	40	310	210	100	15	6	88	71	15,5	M10×1	74	M6	6,6	8,8	7,5
RSM100.360.100	100	40	360	260	100	15	6	46	30	15,5	M10×1	74	M6	6,6	10,9	8,9
RSK100.360.100	100	40	360	260	100	15	6	88	71	15,5	M10×1	74	M6	6,6	10,9	8,9
RSM100.410.100	100	40	410	310	100	15	6	46	30	15,5	M10×1	74	M6	6,6	13	10
RSK100.410.100	100	40	410	310	100	15	6	88	71	15,5	M10×1	74	M6	6,6	13	10
RSM100.360.150	100	40	360	210	150	15	6	46	30	15,5	M10×1	74	M6	6,6	8,8	8,2
RSK100.360.150	100	40	360	210	150	15	6	88	71	15,5	M10×1	74	M6	6,6	8,8	8,2
RSM100.410.150	100	40	410	260	150	15	6	46	30	15,5	M10×1	74	M6	6,6	10,9	9,6
RSK100.410.150	100	40	410	260	150	15	6	88	71	15,5	M10×1	74	M6	6,6	10,9	9,6
RSM100.460.150	100	40	460	310	150	15	6	46	30	15,5	M10×1	74	M6	6,6	13	11
RSK100.460.150	100	40	460	310	150	15	6	88	71	15,5	M10×1	74	M6	6,6	13	11
RSM100.460.200	100	40	460	260	200	15	6	46	30	15,5	M10×1	74	M6	6,6	10,9	10
RSK100.460.200	100	40	460	260	200	15	6	88	71	15,5	M10×1	74	M6	6,6	10,9	10
RSM150.410.100	150	50	410	310	100	20	8	63	47	24	Tr16×2	116	M8	9	53	20
RSK150.410.100	150	50	410	310	100	20	8	122	102	24	Tr16×2	116	M8	9	53	20
RSM150.510.100	150	50	510	410	100	20	8	63	47	24	Tr16×2	116	M8	9	71	25
RSK150.510.100	150	50	510	410	100	20	8	122	102	24	Tr16×2	116	M8	9	71	25
RSM150.610.100	150	50	610	510	100	20	8	63	47	24	Tr16×2	116	M8	9	88	30
RSK150.610.100	150	50	610	510	100	20	8	122	102	24	Tr16×2	116	M8	9	88	30
RSM150.510.200	150	50	510	310	200	20	8	63	47	24	Tr16×2	116	M8	9	53	22
RSK150.510.200	150	50	510	310	200	20	8	122	102	24	Tr16×2	116	M8	9	53	22
RSM150.610.200	150	50	610	410	200	20	8	63	47	24	Tr16×2	116	M8	9	71	28
RSK150.610.200	150	50	610	410	200	20	8	122	102	24	Tr16×2	116	M8	9	71	28
RSM150.710.200	150	50	710	510	200	20	8	63	47	24	Tr16×2	116	M8	9	88	33
RSK150.710.200	150	50	710	510	200	20	8	122	102	24	Tr16×2	116	M8	9	88	33
RSM150.610.300	150	50	610	310	300	20	8	63	47	24	Tr16×2	116	M8	9	53	25
RSK150.610.300	150	50	610	310	300	20	8	122	102	24	Tr16×2	116	M8	9	53	25
RSM150.710.300	150	50	710	410	300	20	8	63	47	24	Tr16×2	116	M8	9	71	30
RSK150.710.300	150	50	710	410	300	20	8	122	102	24	Tr16×2	116	M8	9	71	30
RSM150.810.300	150	50	810	510	300	20	8	63	47	24	Tr16×2	116	M8	9	88	36
RSK150.810.300	150	50	810	510	300	20	8	122	102	24	Tr16×2	116	M8	9	88	36
RSM150.810.400	150	50	810	410	400	20	8	63	47	24	Tr16×2	116	M8	9	71	33
RSK150.810.400	150	50	810	410	400	20	8	122	102	24	Tr16×2	116	M8	9	71	33

5 Tables: driven and not driven
Linear ball bearing table with drive

Linear ball bearing table with drive

LZAB, LZBB

Ordering key

LZ [ ] - [ ] - [ ] - K [ ]

Type

Design:

Open design	AB
Closed design	BB

Slide width B (mm):
See tables

Total length of slide unit L (mm):
See tables

Screw ∅ (mm) - screw lead (mm):

Screw ∅ 12 - screw lead 05	1205
Screw ∅ 16 - screw lead 05	1605
Screw ∅ 20 - screw lead 05	2005
Screw ∅ 25 - screw lead 05	2505
Screw ∅ 25 - screw lead 10	2510

Example: LZ AB - 230 - 1060 - K 1205

LZBB *(On request)*

Linear ball bearing slides with closed housing and ball screw

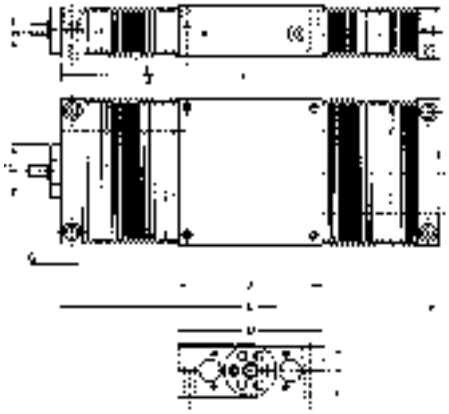

Designations	Dimensions			Nominal Stroke*		Screw data			
	B	H	L	S_1	S_2	n_{max}	d_1	D	C_1
	mm					1/min	mm		
LZBB 100.336.K1205	100	38	336	120	195	5 100	6	38	24
LZBB 100.636.K1205	100	38	636	310	495	3 450	6	38	24
LZBB 100.936.K1205	100	38	936	495	795	1 600	6	38	24
LZBB 100.1236.K1205	100	38	1 236	685	1 095	920	6	38	24
LZBB 100.1536.K1205	100	38	1 536	875	1 395	600	6	38	24
LZBB 130.340.K1605	130	48	340	115	165	3 800	10	47	28
LZBB 130.640.K1605	130	48	640	330	465	3 800	10	47	28
LZBB 130.940.K1605	130	48	940	545	765	2 150	10	47	28
LZBB 130.1240.K1605	130	48	1 240	755	1 065	1 250	10	47	28
LZBB 130.1540. K1605	130	48	1 540	970	1 365	800	10	47	28
LZBB 130.1840.K1605	130	48	1 840	1 185	1 665	560	10	47	28
LZBB 160.410.K2005	160	58	410	145	195	3 050	12	55	36
LZBB 160.650.K2005	160	58	650	325	435	3 050	12	55	36
LZBB 160.1010.K2005	160	58	1 010	595	795	2 450	12	55	36
LZBB 160.1250.K2005	160	58	1 250	780	1 035	1 600	12	55	36
LZBB 160.1610.K2005	160	58	1 610	1 050	1 395	960	12	55	36
LZBB 160.1850.K2005	160	58	1 850	1 230	1 635	730	12	55	36
LZBB 180.350.K2005	180	67	350	80	115	3 050	12	55	36
LZBB 180.650.K2005	180	67	650	300	415	3 050	12	55	36
LZBB 180.950.K2005	180	67	950	515	715	2 800	12	55	36
LZBB 180.1250.K2005	180	67	1 250	740	1 015	1 600	12	55	36
LZBB 180.1550.K2005	180	67	1 550	960	1 315	1 050	12	55	36
LZBB 180.1850.K2005	180	67	1 850	1 175	1 615	730	12	55	36
LZBB 180.2150.K2005	180	67	2 150	1 400	1 915	540	12	55	36
LZBB 180.2450.K2005	180	67	2 450	1 620	2 215	420	12	55	36
LZBB 230.460.K2505	230	84	460	120	165	2 450	14	68	36
LZBB 230.660.K2505	230	84	660	275	365	2 450	14	68	36
LZBB 230.1060.K2505	230	84	1 060	580	765	2 450	14	68	36
LZBB 230.1260.K2505	230	84	1 260	730	965	2 050	14	68	36
LZBB 230.1660.K2505	230	84	1 660	1 035	1 365	1 200	14	68	36
LZBB 230.1860.K2505	230	84	1 860	1 185	1 565	940	14	68	36
LZBB 230.2260.K2505	230	84	2 260	1 490	1 965	640	14	68	36
LZBB 230.2460.K2505	230	84	2 460	1 640	2 165	540	14	68	36
LZBB 230.2860.K2505	230	84	2 860	1 945	2 565	400	14	68	36
LZBB 230.460.K2510	230	84	460	120	165	2 450	14	68	36
LZBB 230.660.K2510	230	84	660	275	365	2 450	14	68	36
LZBB 230.1060.K2510	230	84	1 060	580	765	2 450	14	68	36
LZBB 230.1260.K2510	230	84	1 260	730	965	2 050	14	68	36
LZBB 230.1660.K2510	230	84	1 660	1 035	1 365	1 200	14	68	36
LZBB 230.1860.K2510	230	84	1 860	1 185	1 565	940	14	68	36
LZBB 230.2260.K2510	230	84	2 260	1 490	1 965	640	14	68	36
LZBB 230.2460.K2510	230	84	2 460	1 640	2 165	540	14	68	36
LZBB 230.2860.K2510	230	84	2 860	1 945	2 565	400	14	68	36

* Maximum stroke between end stops: S_1 with bellows (standard version), S_2 without bellows (special version)

5 Tables: driven and not driven
Linear ball bearing table with drive

LZAB *(On request)*

Linear ball bearing slides with open housing and ball screw

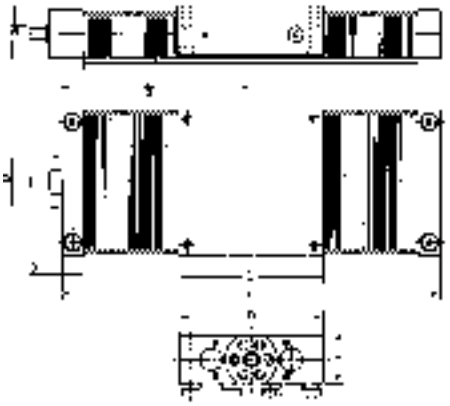

Designations	Dimensions			Nominal Stroke*		Screw data			
	B	H	L	S_1	S_2	n_{max}	d_1	D	C_1
	mm					1/min	mm		
LZAB 100.336.K1205	100	48	336	115	195	5 100	6	38	24
LZAB 100.636.K1205	100	48	636	295	495	3 450	6	38	24
LZAB 100.936.K1205	100	48	936	475	795	1 600	6	38	24
LZAB 100.1236.K1205	100	48	1 236	655	1 095	920	6	38	24
LZAB 100.1536.K1205	100	48	1 536	835	1 395	600	6	38	24
LZAB 130.340.K1605	130	57	340	110	165	3 800	10	47	28
LZAB 130.640.K1605	130	57	640	320	465	3 800	10	47	28
LZAB 130.940.K1605	130	57	940	530	765	2 150	10	47	28
LZAB 130.1240.K1605	130	57	1 240	740	1 065	1 250	10	47	28
LZAB 130.1540.K1605	130	57	1 540	950	1 365	800	10	47	28
LZAB 130.1840.K1605	130	57	1 840	1 155	1 665	560	10	47	28
LZAB 160.410.K2005	160	66	410	140	195	3 050	12	55	36
LZAB 160.650.K2005	160	66	650	320	435	3 050	12	55	36
LZAB 160.1010.K2005	160	66	1 010	585	795	2 450	12	55	36
LZAB 160.1250.K2005	160	66	1 250	765	1 035	1 600	12	55	36
LZAB 160.1610.K2005	160	66	1 610	1 035	1 395	960	12	55	36
LZAB 160.1850.K2005	160	66	1 850	1 210	1 635	730	12	55	36
LZAB 180.350.K2005	180	77	350	85	115	3 050	12	55	36
LZAB 180.650.K2005	180	77	650	320	415	3 050	12	55	36
LZAB 180.950.K2005	180	77	950	550	715	2 800	12	55	36
LZAB 180.1250.K2005	180	77	1 250	785	1 015	1 600	12	55	36
LZAB 180.1550.K2005	180	77	1 550	1 020	1 315	1 050	12	55	36
LZAB 180.1850.K2005	180	77	1 850	1 250	1 615	730	12	55	36
LZAB 180.2150.K2005	180	77	2 150	1 485	1 915	540	12	55	36
LZAB 180.2450.K2005	180	77	2 450	1 720	2 215	420	12	55	36
LZAB 230.460.K2505	230	95	460	120	165	2 450	14	68	36
LZAB 230.660.K2505	230	95	660	275	365	2 450	14	68	36
LZAB 230.1060.K2505	230	95	1 060	580	765	2 450	14	68	36
LZAB 230.1260.K2505	230	95	1 260	730	965	2 050	14	68	36
LZAB 230.1660.K2505	230	95	1 660	1 035	1 365	1 200	14	68	36
LZAB 230.1860.K2505	230	95	1 860	1 185	1 565	940	14	68	36
LZAB 230.2260.K2505	230	95	2 260	1 490	1 965	640	14	68	36
LZAB 230.2460.K2505	230	95	2 460	1 640	2 165	540	14	68	36
LZAB 230.2860.K2505	230	95	2 860	1 945	2 565	400	14	68	36
LZAB 230.460.K2510	230	95	460	120	365	2 450	14	68	36
LZAB 230.660.K2510	230	95	660	275	365	2 450	14	68	36
LZAB 230.1060.K2510	230	95	1 060	580	765	2 450	14	68	36
LZAB 230.1260.K2510	230	95	1 260	730	965	2 050	14	68	36
LZAB 230.1660.K2510	230	95	1 660	1 035	1 365	1 200	14	68	36
LZAB 230.1860.K2510	230	95	1 860	1 185	1 565	940	14	68	36
LZAB 230.2260.K2510	230	95	2 260	1 490	1 965	640	14	68	36
LZAB 230.2460.K2510	230	95	2 460	1 640	2 165	540	14	68	36
LZAB 230.2860.K2510	230	95	2 860	1 945	2 565	400	14	68	36

* Maximum stroke between end stops: S_1 with bellows (standard version); S_2 without bellows (special version)

Profile rail guide slides

LTB with screw drive

Ordering key

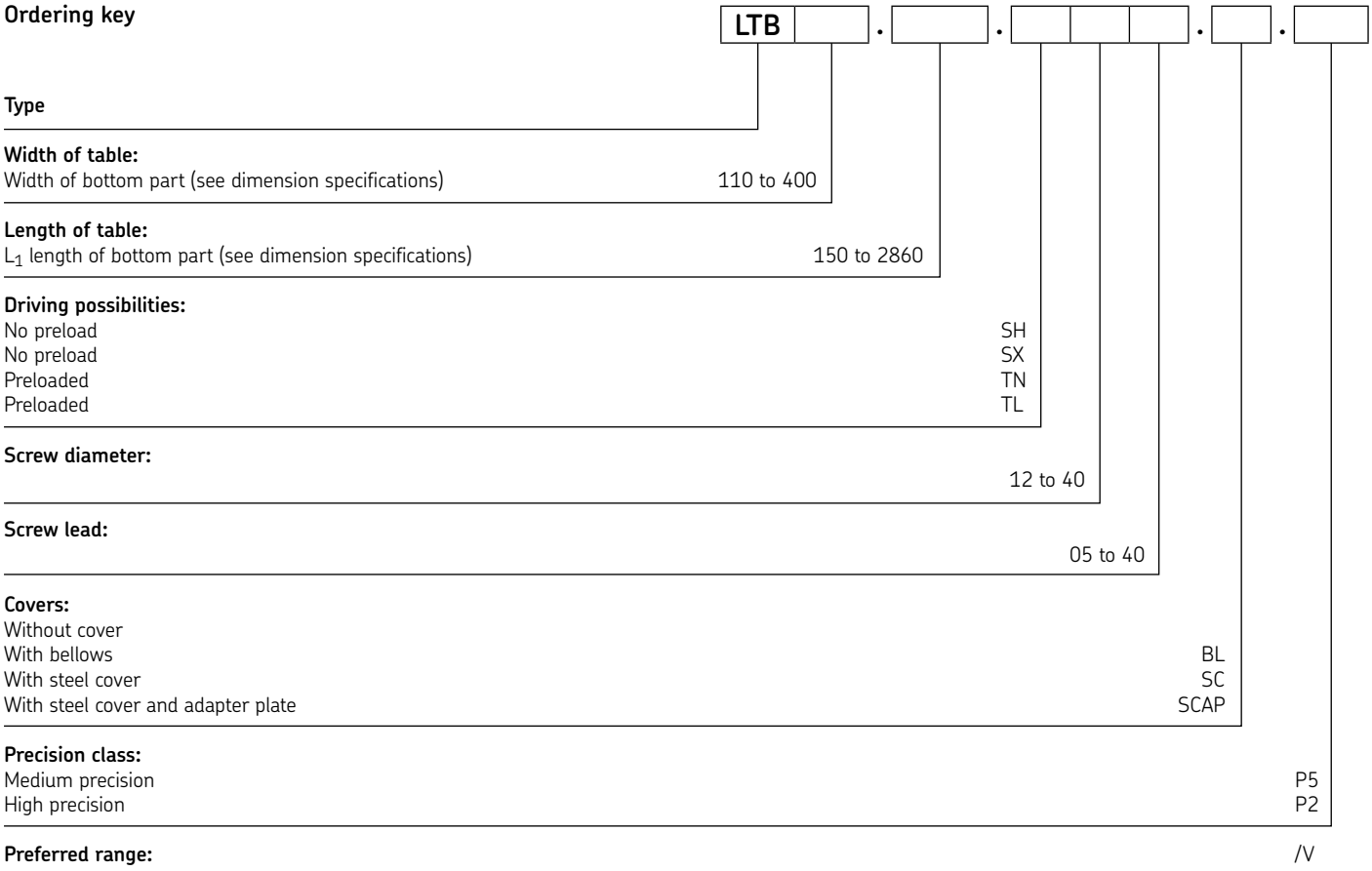

Example: LTB 235 . 0880 . TN 25 05 . BL . P2

Profile rail guide slides, preferred range

LTB

SKF profile rail guide slides LTB of the preferred range are a cost-effective alternative to the in-house production. The LTB preferred range shows 2 widths in 3 lengths each and can be delivered in 2 weeks. The slides are equipped with preloaded profile rails and preloaded ball screw, with bellows covers and end switches.

Designations
LTB110.230.TN1205.BL.P2/V
LTB110.350.TN1205.BL.P2/V
LTB170.340.TN1605.BL.P2/V
LTB170.520.TN1605.BL.P2/V
LTB170.700.TN1605.BL.P2/V
LTB235.520.TN2505.BL.P2/V
LTB235.700.TN2505.BL.P2/V
LTB235.880.TN2505.BL.P2/V

5 Tables: driven and not driven
Profile rail guide slides

LTB110.L1.SD/TN12xx-BL:
Slides with ball screw drive, with or without bellows

T slots in bottom part:
Slot 1: for square nut DIN 562 M5
Slot 2: for square nut DIN 562 M4

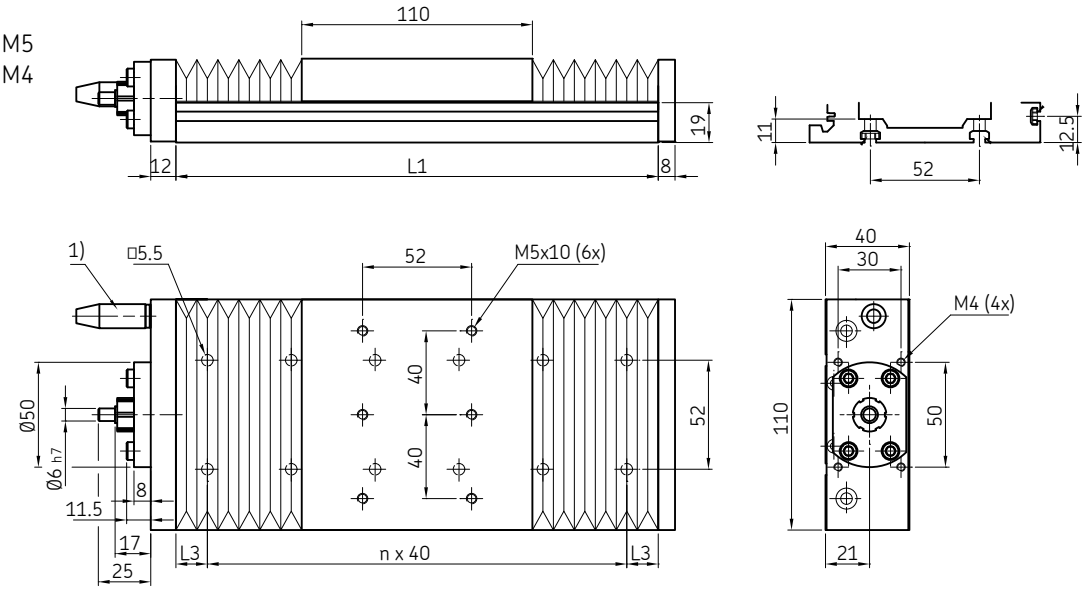

1) Plug connection for limit and reference switches (optional)

Direction of travel: - ⟷ +

Length				Stroke[3]		Screw data SD1205	Screw data TN1205+1210	Weight[4]	
L1	L3	n	KN[2]	S1	S2	n_{max}	n_{max}	G_A	G_0
mm		–		mm		1/min		kg	
150		3		10	30	4 160	7 500	1,7	
190		4	✓	35	70	4 160	7 500	1,6	
230		5		60	110	4 160	7 500	1,8	
270		6	✓	80	150	4 160	7 500	2,0	
310		7		105	190	4 160	7 500	2,2	
350		8	✓	130	230	4 160	7 500	2,4	
390		9		155	270	4 160	7 500	2,6	
430		10	✓	180	310	4 160	7 500	2,7	
470		11		205	350	4 160	7 500	2,9	
510		12	✓	225	390	4 160	7 500	3,1	
550	15	13		250	430	4 160	6 370	3,3	0,8
590		14	✓	275	470	4 160	5 420	3,5	
630		15		300	510	4 160	4 670	3,6	
670		16	✓	325	550	3 900	4 060	3,8	
710		17		350	590	3 420	3 570	4,0	
750		18	✓	375	630	3 030	3 160	4,2	
790		19		395	670	2 700	2 810	4,4	
830		20	✓	420	710	2 420	2 520	4,5	
870		21		445	750	2 180	2 280	4,7	
910		22	✓	470	790	1 980	2 060	4,9	
950		23		495	830	1 800	1 880	5,1	

2) Suitable as top axis for central cross table mounting
3) Maximum stroke between end stops:
S1 with bellows (standard version)
S2 without bellows (special version)
4) G_A = Total mass of slide
G_0 = Linear moving mass of slide top

LTB110.L1.SD/TN12xx-SC:
Slides with ball screw drive and steel cover

T slots in bottom part:
Slot 1: for square nut DIN 562 M5
Slot 2: for square nut DIN 562 M4

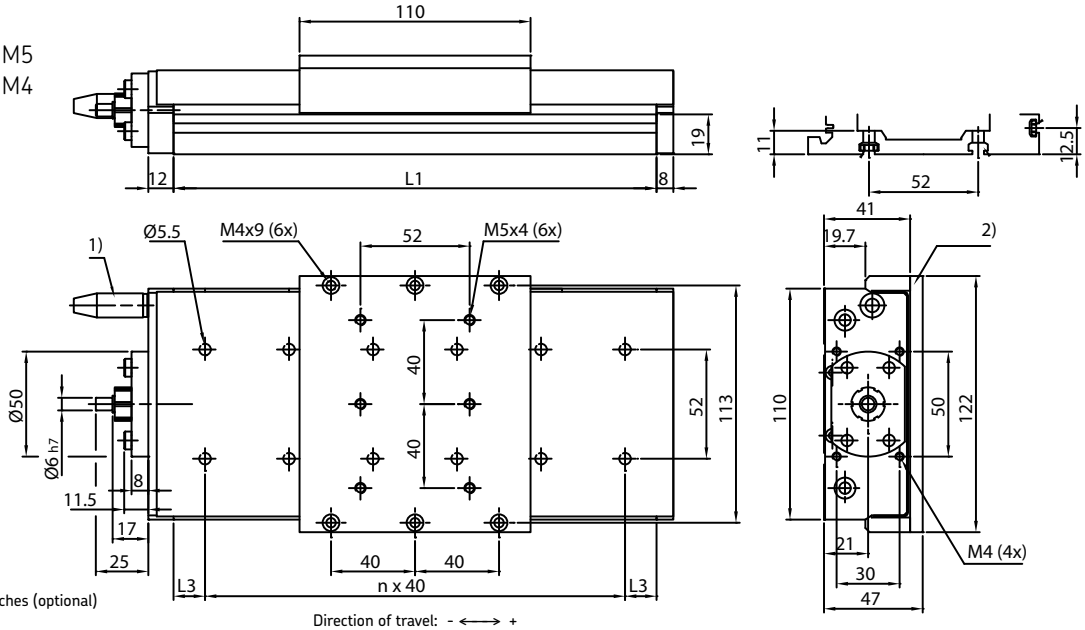

1) Plug connection for limit and reference switches (optional)
2) Adapter plate available on request

Length				Screw data			
			Stroke[4]	SD1205	TN1205+1210	Weight[5]	
L1	L3	n	KN[3]	S	n_{max}	n_{max}	G_A	G_0
mm		–		mm	1/min		kg	
150		3		30	4 160	7 500	2,0	
190		4	✓	70	4 160	7 500	2,2	
230		5		110	4 160	7 500	2,4	
270		6	✓	150	4 160	7 500	2,6	
310		7		190	4 160	7 500	2,8	
350		8	✓	230	4 160	7 500	3,0	
390		9		270	4 160	7 500	3,2	
430		10	✓	310	4 160	7 500	3,4	
470		11		350	4 160	7 500	3,6	
510		12	✓	390	4 160	7 500	3,8	
550	15	13		430	4 160	6 370	4,0	0,9
590		14	✓	470	4 160	5 420	4,2	
630		15		510	4 160	4 670	4,4	
670		16	✓	550	3 900	4 060	4,6	
710		17		590	3 420	3 570	4,8	
750		18	✓	630	3 030	3 160	5,0	
790		19		670	2 700	2 810	5,2	
830		20	✓	710	2 420	2 520	5,4	
870		21		750	2 180	2 280	5,6	
910		22	✓	790	1 980	2 060	5,8	
950		23		830	1 800	1 880	6,0	

3) Suitable as top axis for central cross table mounting
4) Maximum stroke between end stops
5) G_A = Total mass of slide
G_0 = Linear moving mass of slide top

5 Tables: driven and not driven
Profile rail guide slides

LTB170.L1.SD/TN16xx-BL:
Slides with ball screw drive, with or without bellows

T slots in bottom part:
Slot 1: for square nut DIN 562 M5
Slot 2: for square nut DIN 562 M4

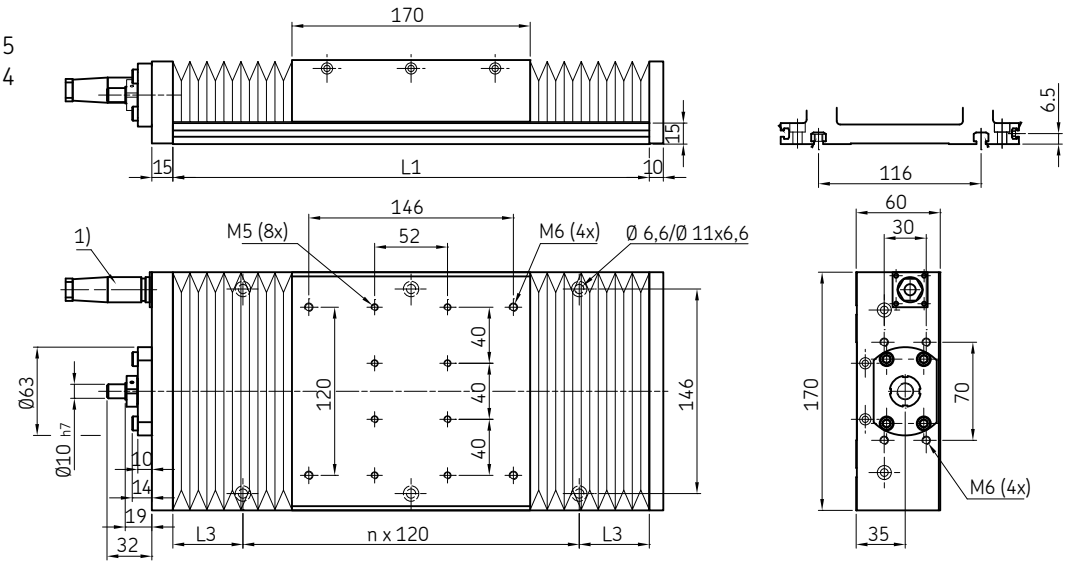

1) Plug connection for limit and reference switches (optional)

Direction of travel: - ⟷ +

Length				Stroke[3]		Screw data SD1605	TN1605	TN1610	TN1616	Weight[4]	
L1	L3	n	KN[2]	S1	S2	n_{max}	n_{max}	n_{max}	n_{max}	G_A	G_0
mm		–		mm		1/min				kg	
220	50	1	✓	35	40	3 120	5 620	5 620	5 620	5,7	
280	20	2		80	100	3 120	5 620	5 620	5 620	6,4	
340	50	2		125	160	3 120	5 620	5 620	5 620	7,1	
400	20	3	✓	175	220	3 120	5 620	5 620	5 620	7,8	
460	50	3	✓	220	280	3 120	5 620	5 620	5 620	8,5	
520	20	4		260	340	3 120	5 620	5 620	5 620	9,2	
580	50	4		305	400	3 120	5 620	5 620	5 620	9,9	
640	20	5	✓	355	460	3 120	5 620	5 620	5 620	10,6	
700	50	5	✓	400	520	3 120	5 620	5 620	5 620	11,3	
760	20	6		445	580	3 120	4 670	4 670	4 670	12,0	
820	50	6		495	640	3 120	3 900	3 900	3 900	12,7	
880	20	7	✓	540	700	3 120	3 300	3 300	3 300	13,4	
940	50	7	✓	580	760	2 830	2 830	2 830	2 830	14,1	2,3
1 000	20	8		625	820	2 460	2 460	2 460	2 460	14,8	
1 060	50	8		675	880	2 150	2 150	2 150	2 150	15,6	
1 120	20	9	✓	720	940	1 900	1 900	1 900	1 900	16,3	
1 180	50	9	✓	765	1 000	1 690	1 690	1 690	1 690	17,0	
1 240	20	10		815	1 060	1 510	1 510	1 510	1 510	17,7	
1 300	50	10		860	1 120	1 360	1 360	1 360	1 360	18,4	
1 360	20	11	✓	900	1 180	1 230	1 230	1 230	1 230	19,1	
1 420	50	11	✓	945	1 240	1 120	1 120	1 120	1 120	19,8	
1 480	20	12		995	1 300	1 020	1 020	1 020	1 020	20,5	
1 540	50	12		1 040	1 360	930	930	930	930	21,2	
1 600	20	13	✓	1 085	1 420	860	860	860	860	21,9	

2) Suitable as top axis for central cross table mounting
3) Maximum stroke between end stops:
S1 with bellows (standard version)
S2 without bellows (special version)
4) G_A = Total mass of slide
G_0 = Linear moving mass of slide top

LTB170.L1.SD/TN16xx-SC:
Slides with ball screw drive and steel cover

T slots in bottom part:
Slot 1: for square nut DIN 562 M5
Slot 2: for square nut DIN 562 M4

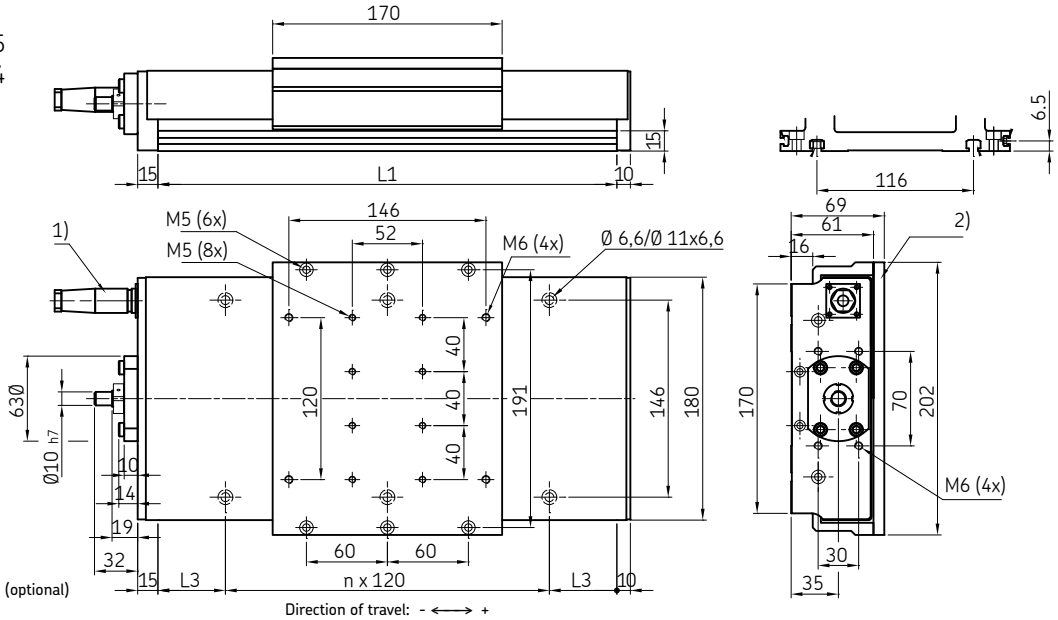

1) Plug connection for limit and reference switches (optional)
2) Adapter plate available on request

Direction of travel: - ⟷ +

Length				Stroke[4]	Screw data SD1605	TN1605	TN1610	TN1616	Weight[5]	
L1	L3	n	KN[3]	S	n_{max}	n_{max}	n_{max}	n_{max}	G_A	G_0
mm		–		mm	1/min				kg	
220	50	1	✓	40	3 120	5 620	5 620	5 620	6,9	
280	20	2		100	3 120	5 620	5 620	5 620	7,7	
340	50	2		160	3 120	5 620	5 620	5 620	8,4	
400	20	3	✓	220	3 120	5 620	5 620	5 620	9,2	
460	50	3	✓	280	3 120	5 620	5 620	5 620	9,9	
520	20	4		340	3 120	5 620	5 620	5 620	10,7	
580	50	4		400	3 120	5 620	5 620	5 620	11,5	
640	20	5	✓	460	3 120	5 620	5 620	5 620	12,2	
700	50	5	✓	520	3 120	5 620	5 620	5 620	13,0	
760	20	6		580	3 120	4 670	4 670	4 670	13,8	
820	50	6		640	3 120	3 900	3 900	3 900	14,5	
880	20	7	✓	700	3 120	3 300	3 300	3 300	15,3	
940	50	7	✓	760	2 830	2 830	2 830	2 830	16,0	3,3
1 000	20	8		820	2 460	2 460	2 460	2 460	16,8	
1 060	50	8		880	2 150	2 150	2 150	2 150	17,6	
1 120	20	9	✓	940	1 900	1 900	1 900	1 900	18,3	
1 180	50	9	✓	1 000	1 690	1 690	1 690	1 690	19,1	
1 240	20	10		1 060	1 510	1 510	1 510	1 510	19,9	
1 300	50	10		1 120	1 360	1 360	1 360	1 360	20,6	
1 360	20	11	✓	1 180	1 230	1 230	1 230	1 230	21,4	
1 420	50	11	✓	1 240	1 120	1 120	1 120	1 120	22,1	
1 480	20	12		1 300	1 020	1 020	1 020	1 020	22,9	
1 540	50	12		1 360	930	930	930	930	23,7	
1 600	20	13	✓	1 420	860	860	860	860	24,4	

3) Suitable as top axis for central cross table mounting
4) Maximum stroke between end stops
5) G_A = Total mass of slide
G_0 = Linear moving mass of slide top

5 Tables: driven and not driven
Profile rail guide slides

LTB235.L1.SX/TN/TL25xx-BL:
Slides with ball screw drive, with or without bellows

T slots in bottom part:
Slot 1: for square nut DIN 562 M5
Slot 2: for square nut DIN 562 M4

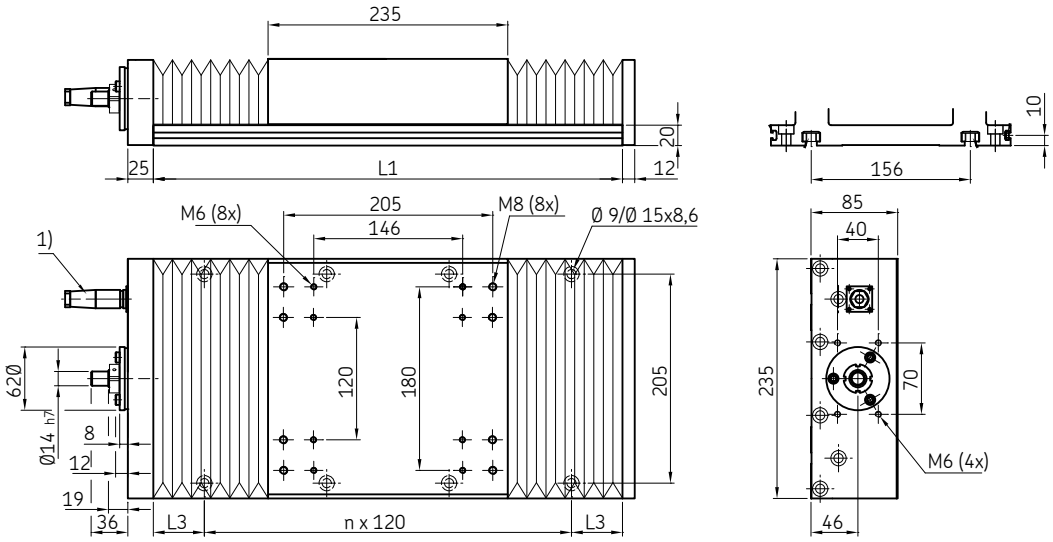

1) Plug connection for limit and reference switches (optional)

Direction of travel: - ⟷ +

Length				Stroke[3]		Screw data SX2505	TN2505	SX2510	TN2510+2520+2525	Weight[4]	
L1	L3	n	KN[2]	S1	S2	n_{max}	n_{max}	n_{max}	n_{max}	G_A	G_0
mm		–		mm		1/min				kg	
280	20	2		25	35	2 000	3 600	2 000	3 600	14,5	
340	50	2		75	95	2 000	3 600	2 000	3 600	15,9	
400	20	3	✓	125	155	2 000	3 600	2 000	3 600	17,2	
460	50	3	✓	175	215	2 000	3 600	2 000	3 600	18,6	
520	20	4		225	275	2 000	3 600	2 000	3 600	20,0	
580	50	4		270	335	2 000	3 600	2 000	3 600	21,3	
640	20	5	✓	325	395	2 000	3 600	2 000	3 600	22,7	
700	50	5	✓	375	455	2 000	3 600	2 000	3 600	24,1	
760	20	6		425	515	2 000	3 600	2 000	3 600	25,4	
820	50	6		475	575	2 000	3 600	2 000	3 600	26,8	
880	20	7	✓	525	635	2 000	3 600	2 000	3 600	28,1	
940	50	7	✓	575	695	2 000	3 600	2 000	3 600	29,5	5,9
1 000	20	8		625	755	2 000	3 600	2 000	3 600	30,9	
1 060	50	8		680	815	2 000	3 600	2 000	3 600	32,2	
1 120	20	9	✓	730	875	2 000	3 390	2 000	3 390	33,6	
1 180	50	9	✓	780	935	2 000	3 010	2 000	3 010	34,9	
1 240	20	10		825	995	2 000	2 690	2 000	2 690	36,3	
1 300	50	10		875	1 055	2 000	2 410	2 000	2 410	37,7	
1 360	20	11	✓	925	1 115	2 000	2 180	2 000	2 180	39,0	
1 420	50	11	✓	980	1 175	1 990	1 980	1 880	1 980	40,4	
1 480	20	12		1 030	1 235	1 810	1 800	1 710	1 800	41,8	
1 540	50	12		1 080	1 295	1 660	1 650	1 570	1 650	43,1	
1 600	20	13	✓	1 130	1 355	1 530	1 520	1 440	1 520	44,5	

2) Suitable as top axis for central cross table mounting
3) Maximum stroke between end stops:
S1 with bellows (standard version)
S2 without bellows (special version)
4) G_A = Total mass of slide
G_0 = Linear moving mass of slide top

LTB235.L1.SX/TN/TL25xx-BL

(Continued)

Length				Stroke[3]		Screw data				Weight[4]	
						SX2505	TN2505	SX2510	TN2510+2520+2525		
L1	L3	n	KN[2]	S1	S2	n_{max}	n_{max}	n_{max}	n_{max}	G_A	G_0
mm		–		mm		1/min				kg	
1 660	50	13	✓	1 180	1 415	1 410	1 400	1 330	1 400	45,8	
1 720	20	14		1 230	1 475	1 300	1 290	1 230	1 290	47,2	
1 780	50	14		1 280	1 535	1 210	1 200	1 140	1 200	48,6	
1 840	20	15	✓	1 335	1 595	1 120	1 120	1 060	1 120	49,9	
1 900	50	15	✓	1 380	1 655	1 050	1 040	990	1 040	51,3	
1 960	20	16		1 430	1 715	980	970	920	970	52,7	
2 020	50	16		1 480	1 775	920	910	870	910	54,0	
2 080	20	17	✓	1 530	1 835	860	860	810	860	55,4	
2 140	50	17	✓	1 580	1 895	810	800	760	800	56,7	
2 200	20	18		1 635	1 955	760	760	720	760	58,1	
2 260	50	18		1 685	2 015	720	720	680	720	59,5	5,9
2 320	20	19	✓	1 735	2 075	680	680	640	680	60,8	
2 380	50	19	✓	1 785	2 135	640	640	610	640	62,2	
2 440	20	20		1 835	2 195	610	610	580	610	63,6	
2 500	50	20		1 880	2 255	580	580	550	580	64,9	
2 560	20	21	✓	1 930	2 315	550	550	520	550	66,3	
2 620	50	21	✓	1 985	2 375	520	520	490	520	67,6	
2 680	20	22		2 035	2 435	500	500	470	500	69,0	
2 740	50	22		2 085	2 495	480	470	450	470	70,4	
2 800	20	23	✓	2 135	2 555	450	450	430	450	71,7	
2 860	50	23	✓	2 185	2 615	430	430	410	430	73,1	

2) Suitable as top axis for central cross table mounting
3) Maximum stroke between end stops:
S1 with bellows (standard version)
S2 without bellows (special version)
4) G_A = Total mass of slide
G_0 = Linear moving mass of slide top

5 Tables: driven and not driven
Profile rail guide slides

LTB235.L1.SX/TN/TL25xx-SC:
Slides with ball screw drive and steel cover

T slots in bottom part:
Slot 1: for square nut DIN 562 M5
Slot 2: for square nut DIN 562 M4

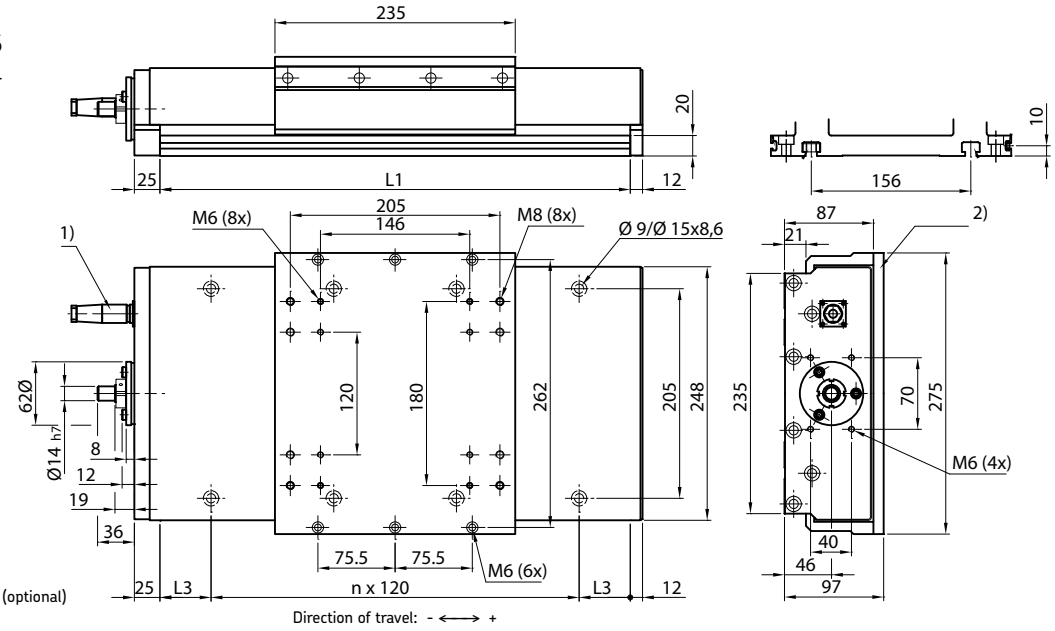

1) Plug connection for limit and reference switches (optional)
2) Adapter plate available on request

Length				Screw data						
				Stroke[4]	SX2505	TN2505	SX2510	TN2510+2520+2525	Weight[5]	
L1	L3	n	KN[3]	S	n_{max}	n_{max}	n_{max}	n_{max}	G_A	G_0
mm		–		mm	1/min				kg	
280	20	2		35	2 000	3 600	2 000	3 600	18,1	
340	50	2		95	2 000	3 600	2 000	3 600	19,6	
400	20	3	✓	155	2 000	3 600	2 000	3 600	21,1	
460	50	3	✓	215	2 000	3 600	2 000	3 600	22,7	
520	20	4		275	2 000	3 600	2 000	3 600	24,2	
580	50	4		335	2 000	3 600	2 000	3 600	25,7	
640	20	5	✓	395	2 000	3 600	2 000	3 600	27,3	
700	50	5	✓	455	2 000	3 600	2 000	3 600	28,8	
760	20	6		515	2 000	3 600	2 000	3 600	30,3	
820	50	6		575	2 000	3 600	2 000	3 600	31,8	
880	20	7	✓	635	2 000	3 600	2 000	3 600	33,4	
940	50	7	✓	695	2 000	3 600	2 000	3 600	34,9	8,5
1 000	20	8		755	2 000	3 600	2 000	3 600	36,4	
1 060	50	8		815	2 000	3 600	2 000	3 600	37,9	
1 120	20	9	✓	875	2 000	3 390	2 000	3 390	39,5	
1 180	50	9	✓	935	2 000	3 010	2 000	3 010	41,0	
1 240	20	10		995	2 000	2 690	2 000	2 690	42,5	
1 300	50	10		1 055	2 000	2 410	2 000	2 410	44,1	
1 360	20	11	✓	1 115	2 000	2 180	2 000	2 180	45,6	
1 420	50	11	✓	1 175	1 990	1 980	1 880	1 980	47,1	
1 480	20	12		1 235	1 810	1 800	1 710	1 800	48,6	
1 540	50	12		1 295	1 660	1 650	1 570	1 650	50,2	
1 600	20	13	✓	1 355	1 530	1 520	1 440	1 520	51,7	

3) Suitable as top axis for central cross table mounting
4) Maximum stroke between end stops
5) G_A = Total mass of slide
G_0 = Linear moving mass of slide top

LTB235.L1.SX/TN/TL25xx-SC

(Continued)

Length				Screw data						
				Stroke[4]	SX2505	TN2505	SX2510	TN2510+2520+2525	Weight[5]	
L1	L3	n	KN[3]	S	n_{max}	n_{max}	n_{max}	n_{max}	G_A	G_0
mm		–		mm	1/min				kg	
1 660	50	13	✓	1 415	1 410	1 400	1 330	1 400	53,2	
1 720	20	14		1 475	1 300	1 290	1 230	1 290	54,7	
1 780	50	14		1 535	1 210	1 200	1 140	1 200	56,3	
1 840	20	15	✓	1 595	1 120	1 120	1 060	1 120	57,8	
1 900	50	15	✓	1 655	1 050	1 040	990	1 040	59,3	
1 960	20	16		1 715	980	970	920	970	60,9	
2 020	50	16		1 775	920	910	870	910	62,4	
2 080	20	17	✓	1 835	860	860	810	860	63,9	
2 140	50	17	✓	1 895	810	800	760	800	65,4	
2 200	20	18		1 955	760	760	720	760	67,0	
2 260	50	18		2 015	720	720	680	720	68,5	8,5
2 320	20	19	✓	2 075	680	680	640	680	70,0	
2 380	50	19	✓	2 135	640	640	610	640	71,5	
2 440	20	20		2 195	610	610	580	610	73,1	
2 500	50	20		2 255	580	580	550	580	74,6	
2 560	20	21	✓	2 315	550	550	520	550	76,1	
2 620	50	21	✓	2 375	520	520	490	520	77,7	
2 680	20	22		2 435	500	500	470	500	79,2	
2 740	50	22		2 495	480	470	450	470	80,7	
2 800	20	23	✓	2 555	450	450	430	450	82,2	
2 860	50	23	✓	2 615	430	430	410	430	83,8	

3) Suitable as top axis for central cross table mounting
4) Maximum stroke between end stops
5) G_A = Total mass of slide
G_0 = Linear moving mass of slide top

5 Tables: driven and not driven
Profile rail guide slides

LTB320.L1.SX/TN/TL32xx-BL:
Slides with ball screw drive, with or without bellows

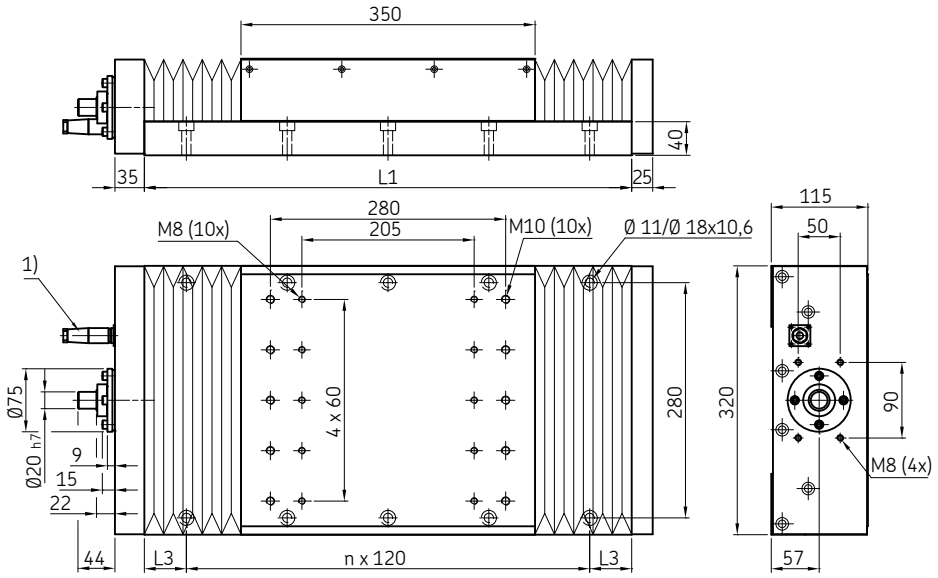

1) Plug connection for limit and reference switches (optional)

Direction of travel: - ⟷ +

Length			Stroke[2]		Screw data SX3205	TN3205	SX3210	TN3210	TN3220+3232+3240	Weight[3]	
L1	L3	n	S1	S2	n_{max}	n_{max}	n_{max}	n_{max}	n_{max}	G_A	G_0
mm		–	mm		1/min					kg	
580		4	185	220	1 560	2 810	1 560	2 810	2 810	43,5	
700		5	290	340	1 560	2 810	1 560	2 810	2 810	48,5	
820		6	390	460	1 560	2 810	1 560	2 810	2 810	53,4	
940		7	500	580	1 560	2 810	1 560	2 810	2 810	58,4	
1 060		8	600	700	1 560	2 810	1 560	2 810	2 810	63,3	
1 180		9	710	820	1 560	2 810	1 560	2 810	2 810	68,2	
1 300		10	810	940	1 560	2 810	1 560	2 810	2 810	73,2	
1 420		11	915	1 060	1 560	2 810	1 560	2 810	2 810	78,1	
1 540		12	1 015	1 180	1 560	2 610	1 560	2 520	2 520	83,1	
1 660	50	13	1 125	1 300	1 560	2 180	1 560	2 100	2 100	88,0	13,3
1 780		14	1 225	1 420	1 560	1 850	1 560	1 780	1 780	92,9	
1 900		15	1 335	1 540	1 560	1 590	1 440	1 530	1 530	97,9	
2 020		16	1 435	1 660	1 380	1 380	1 250	1 330	1 330	102,8	
2 140		17	1 540	1 780	1 210	1 200	1 090	1 160	1 160	107,8	
2 260		18	1 645	1 900	1 070	1 060	970	1 030	1 030	112,7	
2 380		19	1 750	2 020	950	950	860	910	910	117,7	
2 500		20	1 850	2 140	850	850	770	820	820	122,6	
2 620		21	1 960	2 260	760	760	690	740	740	127,5	
2 740		22	2 060	2 380	690	690	630	670	670	132,5	
2 860		23	2 165	2 500	630	630	570	600	600	137,4	

2) Maximum stroke between end stops:
S1 with bellows (standard version)
S2 without bellows (special version)
3) G_A = Total mass of slide
G_0 = Linear moving mass of slide top

LTB320.L1.SX/TN/TL32xx-SC:
Slides with ball screw drive and steel cover

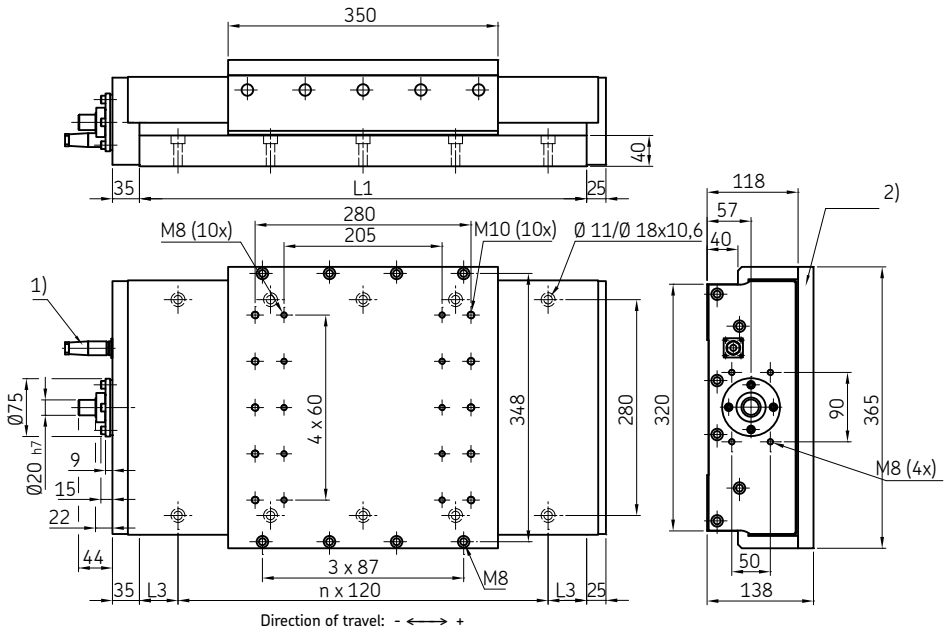

1) Plug connection for limit and reference switches (optional)
2) Adapter plate available on request

Length			Stroke[3]	Screw data SX3205	TN3205	SX3210	TN3210	TN3220+3232+3240	Weight[4]	
L1	L3	n	S	n_{max}	n_{max}	n_{max}	n_{max}	n_{max}	G_A	G_0
mm		–	mm	1/min					kg	
580	50	4	220	1 560	2 810	1 560	2 810	2 810	62,9	30,4
700		5	340	1 560	2 810	1 560	2 810	2 810	68,3	
820		6	460	1 560	2 810	1 560	2 810	2 810	73,8	
940		7	580	1 560	2 810	1 560	2 810	2 810	79,2	
1 060		8	700	1 560	2 810	1 560	2 810	2 810	84,6	
1 180		9	820	1 560	2 810	1 560	2 810	2 810	90,0	
1 300		10	940	1 560	2 810	1 560	2 810	2 810	95,5	
1 420		11	1 060	1 560	2 810	1 560	2 810	2 810	100,9	
1 540		12	1 180	1 560	2 610	1 560	2 520	2 520	106,3	
1 660		13	1 300	1 560	2 180	1 560	2 100	2 100	111,7	
1 780		14	1 420	1 560	1 850	1 560	1 780	1 780	117,2	
1 900		15	1 540	1 560	1 590	1 440	1 530	1 530	122,6	
2 020		16	1 660	1 380	1 380	1 250	1 330	1 330	128,0	
2 140		17	1 780	1 210	1 200	1 090	1 160	1 160	133,5	
2 260		18	1 900	1 070	1 060	970	1 030	1 030	138,9	
2 380		19	2 020	950	950	860	910	910	144,3	
2 500		20	2 140	850	850	770	820	820	149,7	
2 620		21	2 260	760	760	690	740	740	155,2	
2 740		22	2 380	690	690	630	670	670	160,6	
2 860		23	2 500	630	630	570	600	600	166,0	

3) Maximum stroke between end stops
4) G_A = Total mass of slide
G_0 = Linear moving mass of slide top

5 Tables: driven and not driven
Profile rail guide slides

LTB400.L1.SX/TN/TL40xx-BL:
Slides with ball screw drive, with or without bellows

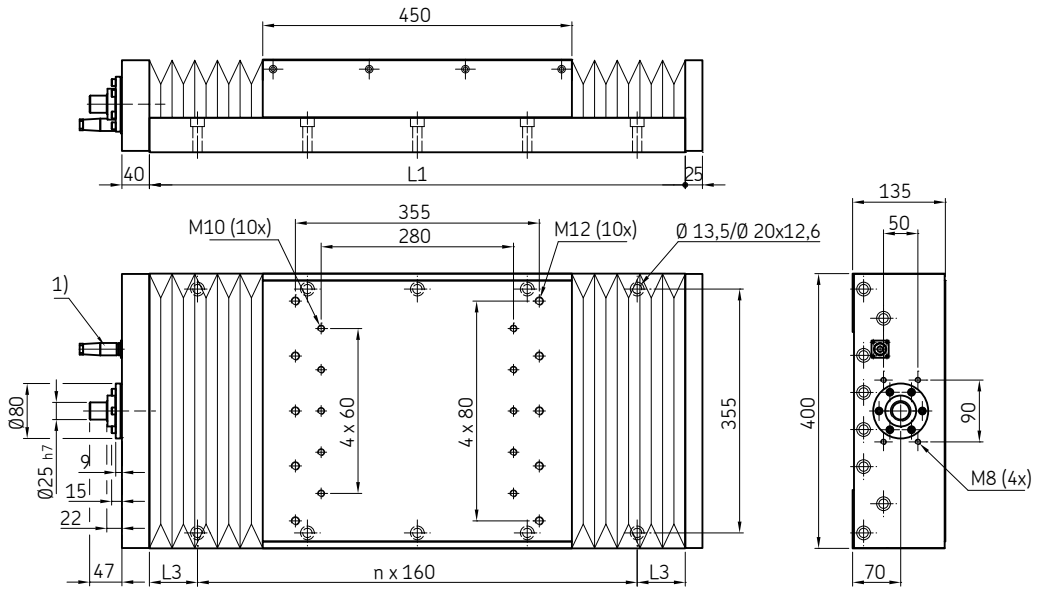

1) Plug connection for limit and reference switches (optional)

Direction of travel: - ⟷ +

Length			Stroke[2]		Screw data SX4005	TN4005	SX4010	TN4010	TN4020+4040	Weight[3]	
L1	L3	n	S1	S2	n_{max}	n_{max}	n_{max}	n_{max}	n_{max}	G_A	G_0
mm		–	mm		1/min					kg	
620		3	135	160	1 250	2 250	1 250	2 250	2 250	77,0	
780		4	275	320	1 250	2 250	1 250	2 250	2 250	87,7	
940		5	420	480	1 250	2 250	1 250	2 250	2 250	98,4	
1 100		6	560	640	1 250	2 250	1 250	2 250	2 250	109,1	
1 260		7	700	800	1 250	2 250	1 250	2 250	2 250	119,8	
1 420		8	850	960	1 250	2 250	1 250	2 250	2 250	130,5	
1 580		9	990	1 120	1 250	2 250	1 250	2 250	2 250	141,2	
1 740	70	10	1 130	1 280	1 250	2 250	1 250	2 250	2 250	151,9	25,2
1 900		11	1 270	1 440	1 250	2 150	1 250	1 980	1 980	162,6	
2 060		12	1 410	1 600	1 250	1 780	1 250	1 630	1 630	173,3	
2 220		13	1 555	1 760	1 250	1 490	1 250	1 370	1 370	184,0	
2 380		14	1 695	1 920	1 250	1 270	1 180	1 160	1 160	194,7	
2 540		15	1 835	2 080	1 090	1 090	1 010	1 000	1 000	205,4	
2 700		16	1 975	2 240	950	950	880	870	870	216,1	
2 860		17	2 125	2 400	840	830	770	760	760	226,8	

2) Maximum stroke between end stops:
S1 with bellows (standard version)
S2 without bellows (special version)
3) G_A = Total mass of slide
G_0 = Linear moving mass of slide top

Notes

5 Tables: driven and not driven
Profile rail guide slides

LTS with linear motor drive

Ordering key

LTS [ ] . [ ] . 1FN3 - [ ] - [ ] . [ ]

Type

Slide width:
Width of bottom part (see dimension specifications) 154/182/212

Slide length:
L_1 length of bottom part (see dimension specifications) 280 to 1960

Linear motor size:
1FN3- 1FN3

Code for Slide width:
154 050
182 100
212 150

Motor length:
154 1K/2K
182 1K/2K/3K
212 1K/2K/3K

Covers:
With bellows BL
Without cover –

Example: LTS 154 . 1900 . 1FN3 - 050 - 2K . BL

Drive: Slides with linear motor drive

These profile rail guide slides are equipped with brushless AC motors and work as follows:

- The coil system (primary part) is located in the moving upper part of the slide.
- The magnetic rail (secondary part) is mounted at the bottom of the slide.
- Three-phase AC synchronous motors with electronic commutation
- Linear encoder integrated in the slide
- Two inductive limit switches

Customer benefits:

- High dynamics and stiffness in a closed loop system
- Good synchronous characteristics
- High acceleration capacity
- High speeds achievable
- Friction and wear-free drive

Refer to table for further technical details.

Table: Linear motor technical details

For slides:			LTS 154.L1.		LTS 182.L1.			LTS 212.L1.		
Motor size		1FN3-	050-1K	050-2K	100-1K	100-2K	100-3K	150-1K	150-2K	150-3K
Boundary conditions:										
DC link voltage	U_{ZK}	V	515	515	515	515	515	515	515	515
Max. winding temperature	$T_{P,MAX}$	°C	120	120	120	120	120	120	120	120
Rated data:										
Rated force	F_N	N	85	170	170	340	510	260	515	775
Rated current	I_N	A	1,3	2,1	2,0	4,1	6,1	3,3	6,6	9,9
Max. speed at FN	$v_{MAX, FN}$	m/s	8,3	6,6	6,6	6,6	6,6	7,0	7,0	7,0
Rated power loss	$P_{V, FN}$	W	30	60	50	90	140	60	130	190
Maximum ratings:										
Maximum force	F_{MAX}	N	320	640	680	1 350	2 030	1 030	2 060	3 100
Maximum current	I_{MAX}	A	7,7	12,6	12,5	25,1	37,6	20,2	40,4	60,6
Max. speed at FMAX	$v_{MAX, FMAX}$	m/s	2,6	2,0	2,2	2,1	2,1	2,4	2,3	2,3
Max. elect. power consumption	$P_{EL, MAX}$	W	1 930	3 500	3 200	6 360	9 520	4 840	9 600	14 360
Stall force	F_0	N	60	120	120	240	359	183	366	549
Stall current	I_0	A	1,0	1,5	1,4	2,9	4,3	2,3	4,6	7,0
Physical constants:										
Force constant at 20 °C	$k_{F,20}$	N/A	65	80	83	83	83	79	79	79
Motor constant at 20 °C	$k_{M,20}$	N/W-2	17,9	25,1	29,6	41,8	51,2	38,3	54,2	66,4
Phase resistance at 20 °C	$R_{KL,20}$	Ohm	8,7	6,7	5,3	2,7	1,8	2,8	1,4	0,9
Phase inductance	L_{KI}	mH	92,6	72,9	68,4	35,4	23,9	39,8	20,6	13,9
Attractive force	F_A	N	730	1 460	1 460	2 910	4 370	2 180	4 370	6 550
Pole width	t_M	mm	15	15	15	15	15	15	15	15
Cogging force	F_{COG}	N	6	10	14	20	30	21	31	46
Frictional force of guide	F_R	N	31	37	33	41	49	35	49	73
Technical data linear encoder:										
Signal output			sinus signal, 1 Vss							
Grading rate			20 µm							
Precision class			±5 µm							
Technical data limit switches:										
Arrangement			2 inductive switches located on the side, adjustable by 50 mm							
Type			PNP-NC							

5 Tables: driven and not driven
Profile rail guide slides

LTS 154.L1.1FN3-050-xK:
Slides with linear motor drive, with or without bellows

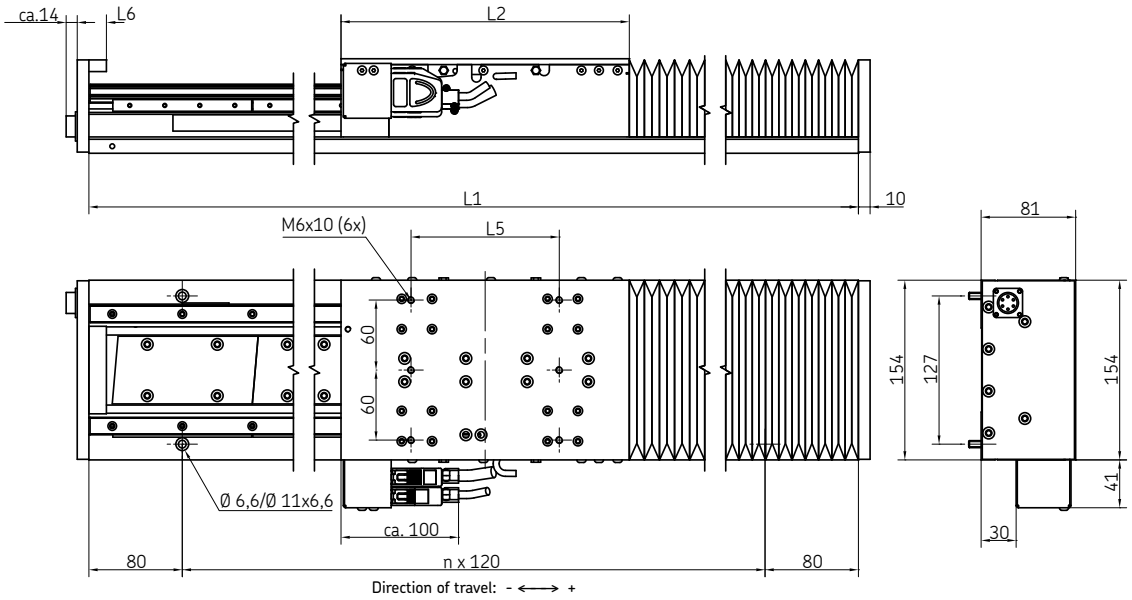

Length			LTS 154.L1.1FN3-050-1K						LTS 154.L1.1FN3-050-2K				
						Stroke[1]					Stroke[1]		
L1	n	G_U[2]	L2	L5	L6	S1	S2	G_0[3]	L2	L5	S1	S2	G_0[3]
mm	–	kg	mm					kg	mm				kg
280	1	4,5				77	98				–	–	
400	2	6,2				166	218				86	113	
520	3	7,9				256	338				175	233	
640	4	9,5				345	458				264	353	
760	5	11,2				434	578				354	473	
880	6	12,8				524	698				443	593	
1 000	7	14,5				613	818				533	713	
1 120	8	16,1	142	118	22,5	703	938	2,7	247	127	622	833	4,6
1 240	9	17,8				792	1 058				711	935	
1 360	10	19,4				881	1 178				801	1 073	
1 480	11	21,0				971	1 298				890	1 193	
1 600	12	22,6				1 060	1 418				980	1 313	
1 720	13	24,3				1 150	1 538				1 075	1 433	
1 840	14	25,9				1 239	1 658				1 165	1 553	
1 960	15	27,5				1 328	1 778				1 254	1 673	

1) Operating stroke
S1 with bellows
S2 without bellows
2) G_U = Stationary mass of slide bottom
3) G_0 = Linear moving mass of slide top

The operating stroke is defined as the maximum stroke between the limit switches.
Distance limit switch – end plate 20 mm (LTS without bellows)
Distance limit switch – end buffer 7,5 mm (LTS without bellows)
Distance limit switch – block length bellows 10 mm (LTS with bellows)

LTS 182.L1.1FN3-100-xK:
Slides with linear motor drive, with or without bellows

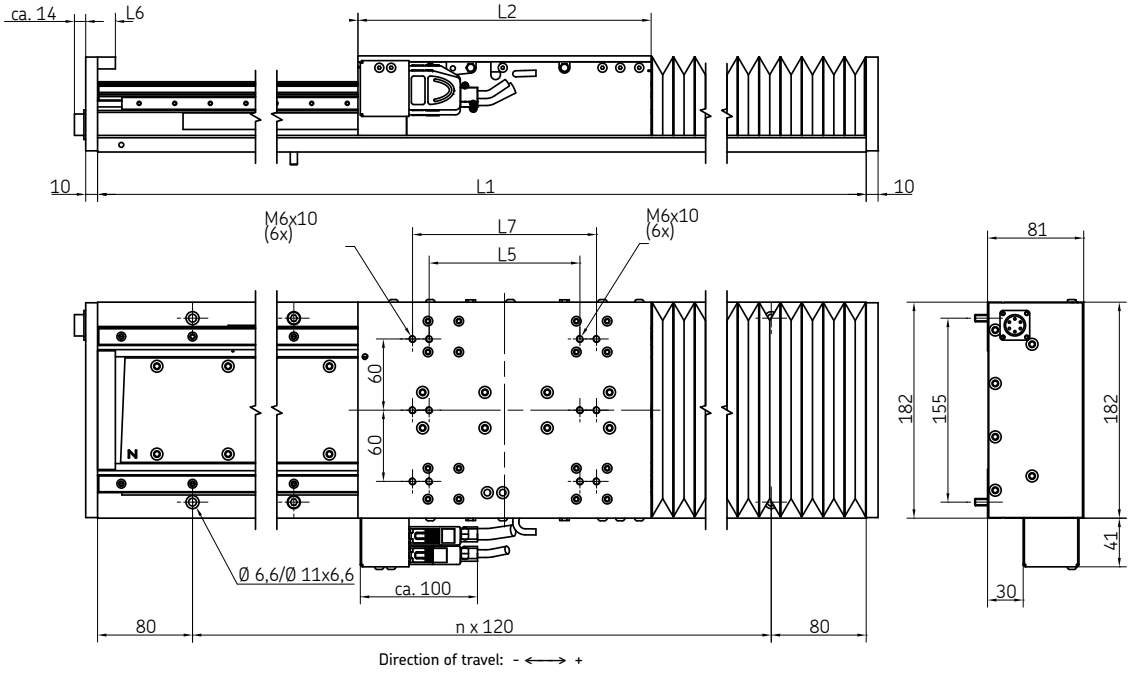

Length			LTS 182.L1.1FN3-100-1K						LTS 182.L1.1FN3-100-2K						LTS 182.L1.1FN3-100-3K					
						Stroke[1]						Stroke[1]						Stroke[1]		
L1	n	G_U[2]	L2	L5	L6	S1	S2	G_0[3]	L2	L5	L7	S1	S2	G_0[3]	L2	L5	L7	S1	S2	G_0[3]
mm	–	kg	mm					kg	mm					kg	mm					kg
280	1	5,5				77	98					–	–					–	–	
400	2	7,6				166	218					86	113					–	–	
520	3	9,7				256	338					175	233					101	128	
640	4	11,8				345	458					264	353					190	248	
760	5	13,8				434	578					354	473					279	368	
880	6	15,9				524	698					443	593					369	488	
1 000	7	17,9				613	818					533	713					458	608	
1 120	8	20,0	142	118	22,5	703	938	3,7	247	127	155	622	833	6,1	352	127	155	548	728	8,6
1 240	9	22,0				792	1 058					711	935					637	848	
1 360	10	24,1				881	1 178					801	1 073					726	968	
1 480	11	26,1				971	1 298					890	1 193					816	1 088	
1 600	12	28,2				1 060	1 418					980	1 313					905	1 208	
1 720	13	30,2				1 150	1 538					1 075	1 433					995	1 328	
1 840	14	32,2				1 239	1 658					1 165	1 553					1 084	1 448	
1 960	15	34,3				1 328	1 778					1 254	1 673					1 173	1 568	

1) Operating stroke
S1 with bellows
S2 without bellows
2) G_U = Stationary mass of slide bottom
3) G_0 = Linear moving mass of slide top

The operating stroke is defined as the maximum stroke between the limit switches.
Distance limit switch – end plate 20 mm (LTS without bellows)
Distance limit switch – end buffer 7,5 mm (LTS without bellows)
Distance limit switch – block length bellows 10 mm (LTS with bellows)

5 Tables: driven and not driven
Profile rail guide slides

LTS 212.L1.1FN3-150-xK:
Slides with linear motor drive, with or without bellows

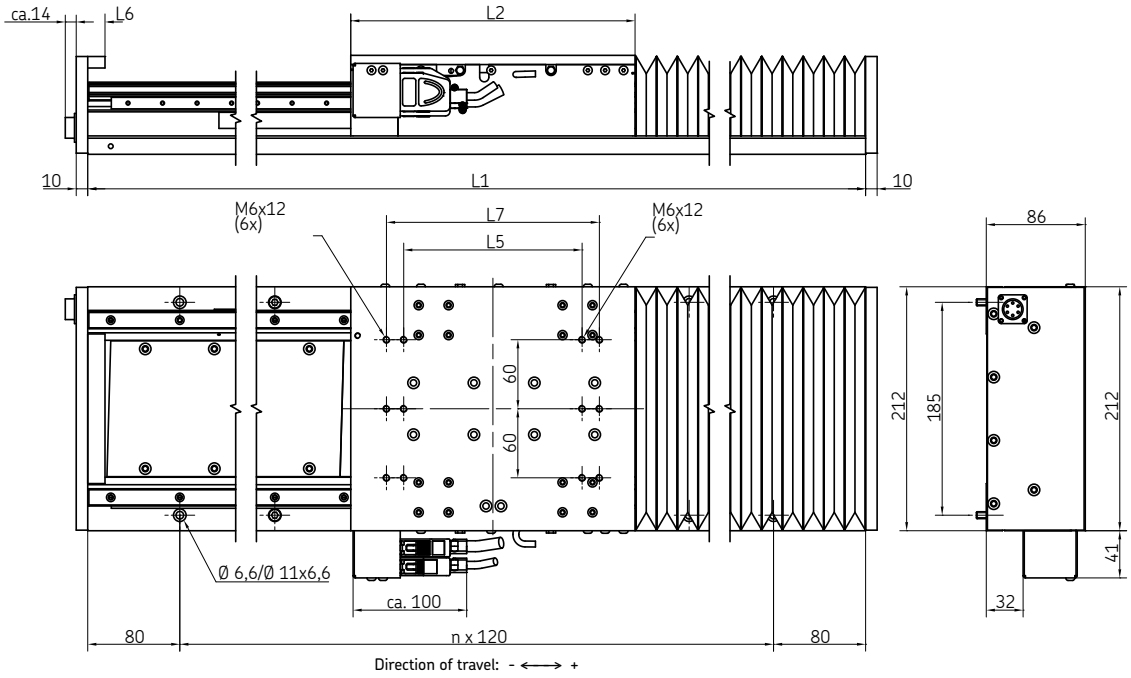

Length			LTS 212.L1.1FN3-150-1K						LTS 212.L1.1FN3-150-2K						LTS 212.L1.1FN3-150-3K					
						Stroke[1]						Stroke[1]						Stroke[1]		
L1	n	G_U[2]	L2	L5	L6	S1	S2	G_0[3]	L2	L5	L7	S1	S2	G_0[3]	L2	L5	L7	S1	S2	G_0[3]
mm	–	kg	mm					kg	mm					kg	mm					kg
280	1	7,2				77	98					–	–					–	–	
400	2	10,1				166	218					86	113					–	–	
520	3	12,9				256	338					175	233					101	128	
640	4	15,7				345	458					264	353					190	248	
760	5	18,5				434	578					354	473					279	368	
880	6	21,3				524	698					443	593					369	488	
1 000	7	24,1				613	818					533	713					458	608	
1 120	8	26,9	142	118	22,5	703	938	4,6	247	155	185	622	833	8,2	352	155	185	548	728	11,9
1 240	9	29,7				792	1 058					711	935					637	848	
1 360	10	32,5				881	1 178					801	1 073					726	968	
1 480	11	35,2				971	1 298					890	1 193					816	1 088	
1 600	12	38,0				1 060	1 418					980	1 313					905	1 208	
1 720	13	40,8				1 150	1 538					1 075	1 433					995	1 328	
1 840	14	43,6				1 239	1 658					1 165	1 553					1 084	1 448	
1 960	15	46,3				1 328	1 778					1 254	1 673					1 173	1 568	

1) Operating stroke
S1 with bellows
S2 without bellows
2) G_U = Stationary mass of slide bottom
3) G_0 = Linear moving mass of slide top

The operating stroke is defined as the maximum stroke between the limit switches.
Distance limit switch – end plate 20 mm (LTS without bellows)
Distance limit switch – end buffer 7,5 mm (LTS without bellows)
Distance limit switch – block length bellows 10 mm (LTS with bellows)

LTS 212.L1.1FN3-150-xK

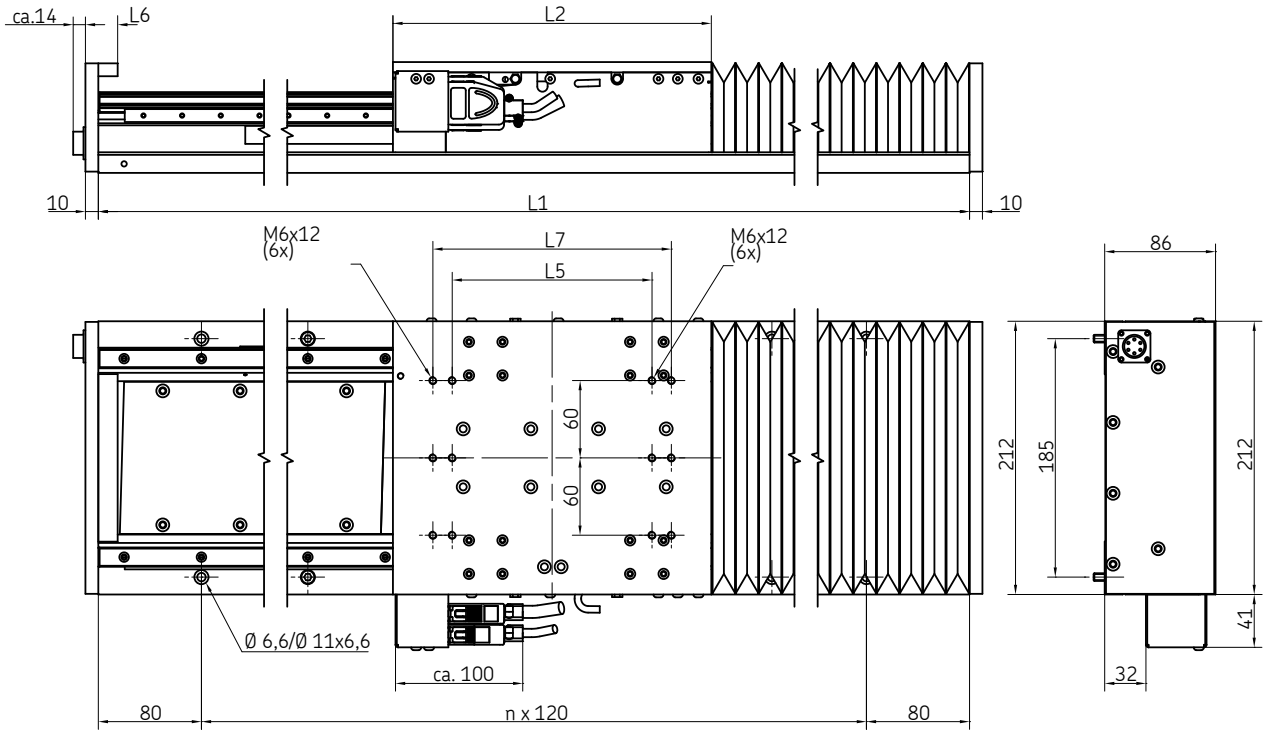

Designations				Stroke[1]			Maximum static load per slide[2]				
	G_u[3]	L_1	L_2	S_1	S_2	G_0[4]	F_{oz}[3]	F_{oy}	M_{ox}[4]	M_{oy}	M_{oz}
	kg	mm				kg	kN			kNm	
LTS 154.L1.1FN3-050-1K	4,5 ... 27,5	280 ... 1 960	142	77 ... 1 328	98 ... 1 778	2,7	31,67	16,2	1,52	1,14	1,14
LTS 154.L1.1FN3-050-2K	6,2 ... 27,5	400 ... 1 960	247	86 ... 1 254	113 ... 1 673	4,6	52,54	27,0	2,522	3,284	3,284
LTS 182.L1.1FN3-100-1K	5,5 ... 34,3	280 ... 1 960	142	77 ... 1 328	98 ... 1 778	3,7	30,940	16,200	1,918	1,114	1,114
LTS 182.L1.1FN3-100-2K	7,6 ... 34,3	400 ... 1 960	247	86 ... 1 254	113 ... 1 673	6,1	51,090	27,000	3,168	3,193	3,193
LTS 182.L1.1FN3-100-3K	9,7 ... 34,3	520 ... 1 960	352	101 ... 1 173	128 ... 1 568	8,6	76,430	40,400	4,739	7,070	7,070
LTS 212.L1.1FN3-150-1K	7,2 ... 46,3	280 ... 1 960	142	77 ... 1 328	98 ... 1 778	4,6	30,220	16,200	2,327	1,088	1,088
LTS 212.L1.1FN3-150-2K	10,1 ... 46,3	400 ... 1 960	247	86 ... 1 254	113 ... 1 673	8,2	76,430	40,400	5,885	4,777	4,777
LTS 212.L1.1FN3-150-3K	12,9 ... 46,3	520 ... 1 960	352	101 ... 1 173	128 ... 1 568	11,9	114,650	60,600	8,828	8,599	8,599

1) Operating stroke: S1 with bellows, S2 without bellows
2) Loads F_{oz} and F_{oy} apply under central load, but not to slides with steel cover (data available on request)
Moments M_{ox} and Moz apply under pure moment load (without force), but not to slides with steel cover (data available on request)
3) Stationary mass of slide bottom
4) Linear moving mass of slide top

The operating stroke is defined as the maximum stroke between the limit switches.

Distance limit switch – end plate	20 mm (LTS without bellows)
Distance limit switch – end buffer	7,5 mm (LTS without bellows)
Distance limit switch – block length bellows	10 mm (LTS with bellows)

Integration means efficiency

Bees represent what is probably the most eloquent example of a society within the natural world. They exhibit a primordial model of social caste with subdivision of role, as well as full control over defence, labour and even reproduction.

Small organisational wonders of this kind have provided inspiration to SKF in the creation of solutions which transcend single components, resulting in complete units and systems incorporating a wide range of products, to meet the requirements of each individual customer.

With SKF, even the smallest things become great.

Applications

In response to our customer's ultimate need to produce more with less, SKF has combined its knowledge and experience with the latest technology to develop solutions for your specific conditions. Whether your goal is to design equipment that provides more customer value, or to increase overall profitability, with SKF experience and expertise you're likely to find a real solution.

Inspection machine for electronics

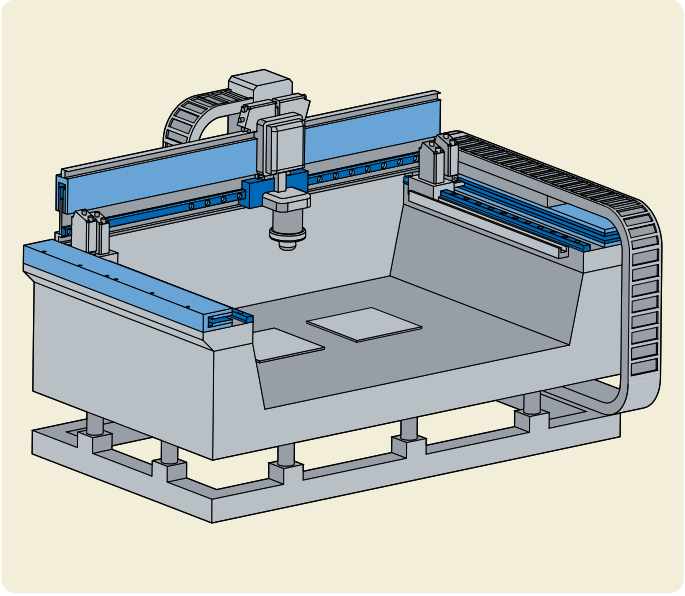

Components application
a) Profile rail guides
b) Linear motors

Testing and 3D measurement machine

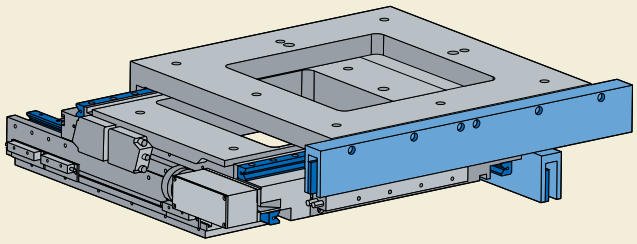

Components application
a) Precision rail guides
b) Linear motors

There's no power without performance

Most people think of the cheetah as the fastest animal because it can reach a speed of 100 kilometres per hour and can accelerate up to 70 in 2 seconds. Certainly this is amazing, but the cheetah doesn't possess the stamina of the gazelle which can race at 100 kilometres per hour for several minutes.

SKF has drawn inspiration from this meeting of power with performance.

Tools like the compact electro-mechanical cylinders combine the features of high acceleration, speed, compact dimensions, reliability and long duration.

With SKF, your applications will run properly for many years to come.

Customized solutions

Standard plug & play electromechanical cylinder

SKF cylinders using SKF planetary roller screws are expanding the limits of linear cylinders. They are designed for long life, high acceleration and high force applications. The cylinders use brushless servo-motor technology, with an in-line direct drive as standard. The high performance electromechanical cylinder consists of an SKF planetary roller screw directly driven through a coupling by a brushless motor. The roller screw converts rotary motion into linear movement.

Benefits
- The power of hydraulics
- The velocity of pneumatics

More information is available in **publication 5338**.

Compact electromechanical cylinder

Compact for all applications:
This product range provides high power density in a small package. Approximately 40 % smaller than standard electromechanical cylinders, there is the added advantage of reduced weight. Ideal for fixed and robot mounted applications. Whatever the requirement, CEMC cylinders provide a compact and dynamic solution, maximum performance and value through high availability, productivity and consequent low costs through the life of the product.

Benefits
- High power and reliability
- Compact and dynamic solution

More information is available in **publication 5338**.

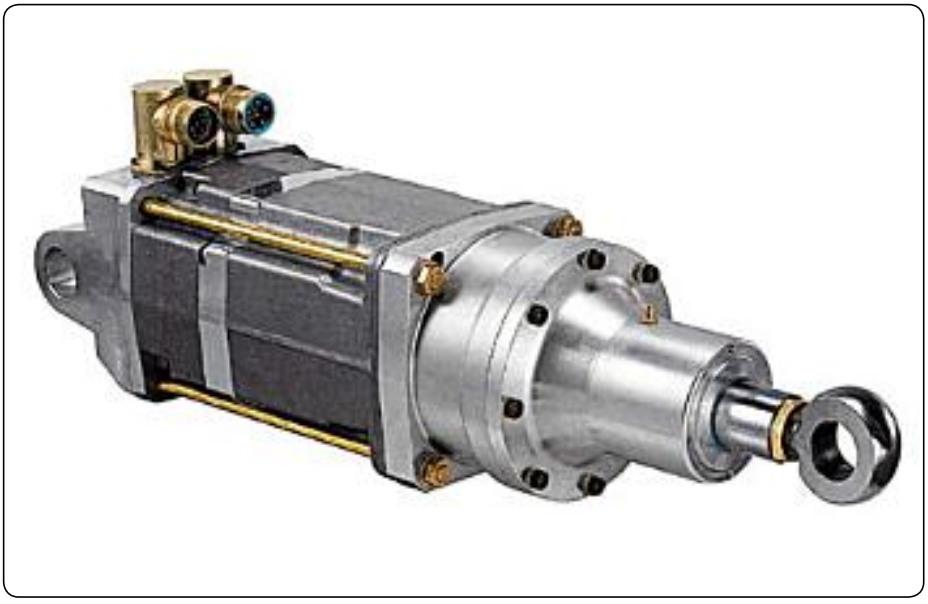

Complete systems for positioning

On special demand, SKF designs and manufactures complete systems, either from SKF standard components or special solutions that are exactly tailored to the respective application.

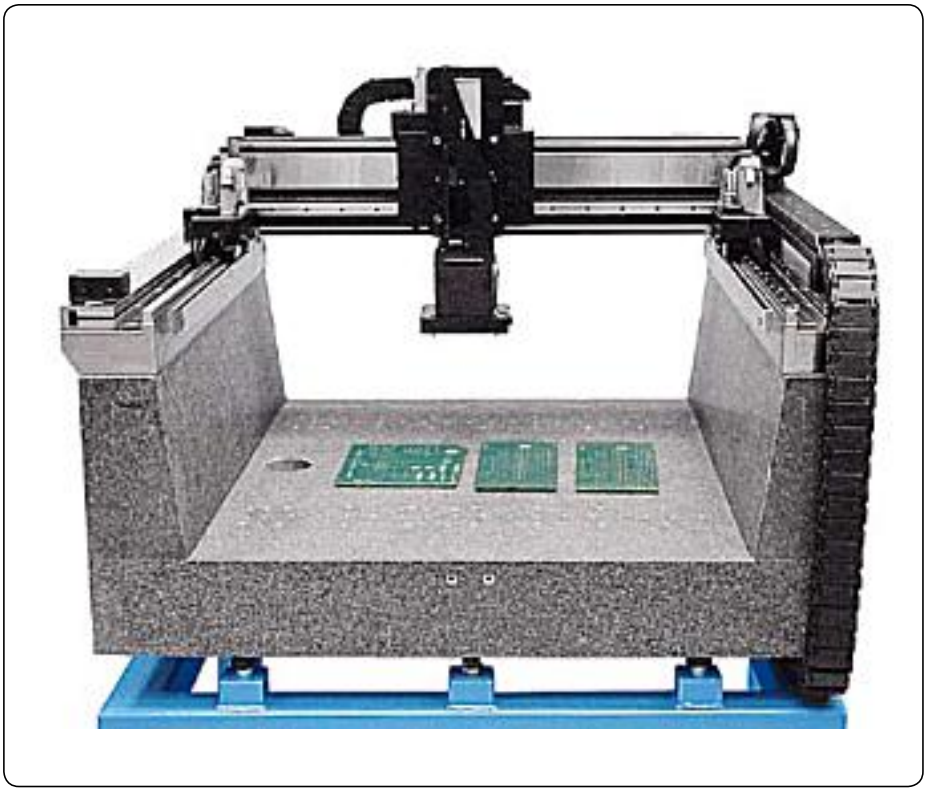

Linear motor tables

The compact cross tables with linear motor drive are high-precision positioning units, equipped with ironless linear motor and precision cross roller rail guides with patented Anti cage creeping System (ACS). They are available in aluminium and cast iron and are ideally suited for wafer processing and measurements applications. The electrical stroke is set with optical limit switches, integrated in the length measurement system.

Notes

SKF – the knowledge engineering company

From the company that invented the self-aligning ball bearing more than 100 years ago, SKF has evolved into a knowledge engineering company that is able to draw on five technology platforms to create unique solutions for its customers. These platforms include bearings, bearing units and seals, of course, but extend to other areas including: lubricants and lubrication systems, critical for long bearing life in many applications; mechatronics that combine mechanical and electronics knowledge into systems for more effective linear motion and sensorized solutions; and a full range of services, from design and logistics support to conditioning monitoring and reliability systems.

Though the scope has broadened, SKF continues to maintain the world's leadership in the design, manufacture and marketing of rolling bearings, as well as complementary products such as radial seals. SKF also holds an increasingly important position in the market for linear motion products, high-precision aerospace bearings, machine tool spindles and plant maintenance services.

The SKF Group is globally certified to ISO 14001, the international standard for environmental management, as well as OHSAS 18001, the health and safety management standard. Individual divisions have been approved for quality certification in accordance with ISO 9001 and other customer specific requirements.

With over 100 manufacturing sites worldwide and sales companies in 70 countries, SKF is a truly international corporation. In addition, our distributors and dealers in some 15 000 locations around the world, an e-business marketplace and a global distribution system put SKF close to customers for the supply of both products and services. In essence, SKF solutions are available wherever and whenever customers need them. Overall, the SKF brand and the corporation are stronger than ever. As the knowledge engineering company, we stand ready to serve you with world-class product competencies, intellectual resources, and the vision to help you succeed.

© Airbus – photo: e*m company, H. Goussé

Evolving by-wire technology
SKF has a unique expertise in fast-growing by-wire technology, from fly-by-wire, to drive-by-wire, to work-by-wire. SKF pioneered practical fly-by-wire technology and is a close working partner with all aerospace industry leaders. As an example, virtually all aircraft of the Airbus design use SKF by-wire systems for cockpit flight control.

SKF is also a leader in automotive by-wire technology, and has partnered with automotive engineers to develop two concept cars, which employ SKF mechatronics for steering and braking. Further by-wire development has led SKF to produce an all-electric forklift truck, which uses mechatronics rather than hydraulics for all controls.

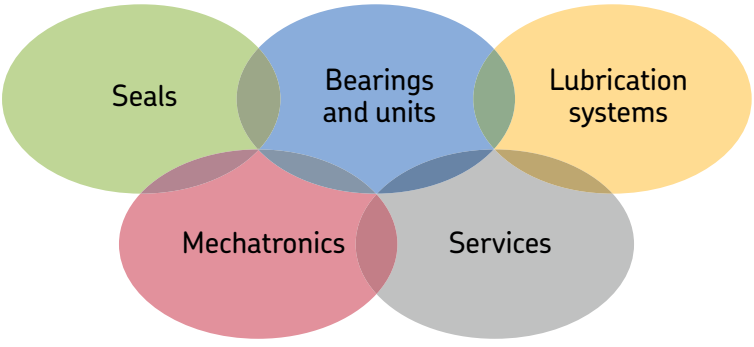

Harnessing wind power
The growing industry of wind-generated electric power provides a source of clean, green electricity. SKF is working closely with global industry leaders to develop efficient and trouble-free turbines, providing a wide range of large, highly specialized bearings and condition monitoring systems to extend equipment life of wind farms located in even the most remote and inhospitable environments.

Working in extreme environments
In frigid winters, especially in northern countries, extreme sub-zero temperatures can cause bearings in railway axleboxes to seize due to lubrication starvation. SKF created a new family of synthetic lubricants formulated to retain their lubrication viscosity even at these extreme temperatures. SKF knowledge enables manufacturers and end user customers to overcome the performance issues resulting from extreme temperatures, whether hot or cold. For example, SKF products are at work in diverse environments such as baking ovens and instant freezing in food processing plants.

Developing a cleaner cleaner
The electric motor and its bearings are the heart of many household appliances. SKF works closely with appliance manufacturers to improve their products' performance, cut costs, reduce weight, and reduce energy consumption. A recent example of this cooperation is a new generation of vacuum cleaners with substantially more suction. SKF knowledge in the area of small bearing technology is also applied to manufacturers of power tools and office equipment.

Maintaining a 350 km/h R&D lab
In addition to SKF's renowned research and development facilities in Europe and the United States, Formula One car racing provides a unique environment for SKF to push the limits of bearing technology. For over 50 years, SKF products, engineering and knowledge have helped make Scuderia Ferrari a formidable force in F1 racing. (The average racing Ferrari utilizes more than 150 SKF components.) Lessons learned here are applied to the products we provide to automakers and the aftermarket worldwide.

Delivering Asset Efficiency Optimization
Through SKF Reliability Systems, SKF provides a comprehensive range of asset efficiency products and services, from condition monitoring hardware and software to maintenance strategies, engineering assistance and machine reliability programmes. To optimize efficiency and boost productivity, some industrial facilities opt for an Integrated Maintenance Solution, in which SKF delivers all services under one fixed-fee, performance-based contract.

Planning for sustainable growth
By their very nature, bearings make a positive contribution to the natural environment, enabling machinery to operate more efficiently, consume less power, and require less lubrication. By raising the performance bar for our own products, SKF is enabling a new generation of high-efficiency products and equipment. With an eye to the future and the world we will leave to our children, the SKF Group policy on environment, health and safety, as well as the manufacturing techniques, are planned and implemented to help protect and preserve the earth's limited natural resources. We remain committed to sustainable, environmentally responsible growth.

Notes

Notes

Notes

Notes

Notes

sale@technobearing.ru www.technobearing.ru 8 (800) 700-72-07 (звонок бесплатный)

® SKF is a registered trademark of the SKF Group.
Turcite-B is a registered trademark of Busak & Shamban GmbH

© SKF Group 2012
The contents of this publication are the copyright of the publisher and may not be reproduced (even extracts) unless prior written permission is granted. Every care has been taken to ensure the accuracy of the information contained in this publication but no liability can be accepted for any loss or damage whether direct, indirect or consequential arising out of the use of the information contained herein.

PUB MT/P1 12774 EN · May 2012

This publication supersedes publication 4664/6.

Printed in Italy on environmentally friendly paper.

Certain image(s) used under license from Shutterstock.com

sale@technobearing.ru www.technobearing.ru 8 (800) 700-72-07 (звонок бесплатный)